KLEINFELDER

Bright People. Right Solutions.

Figures

APPENDIX A – FIGURES

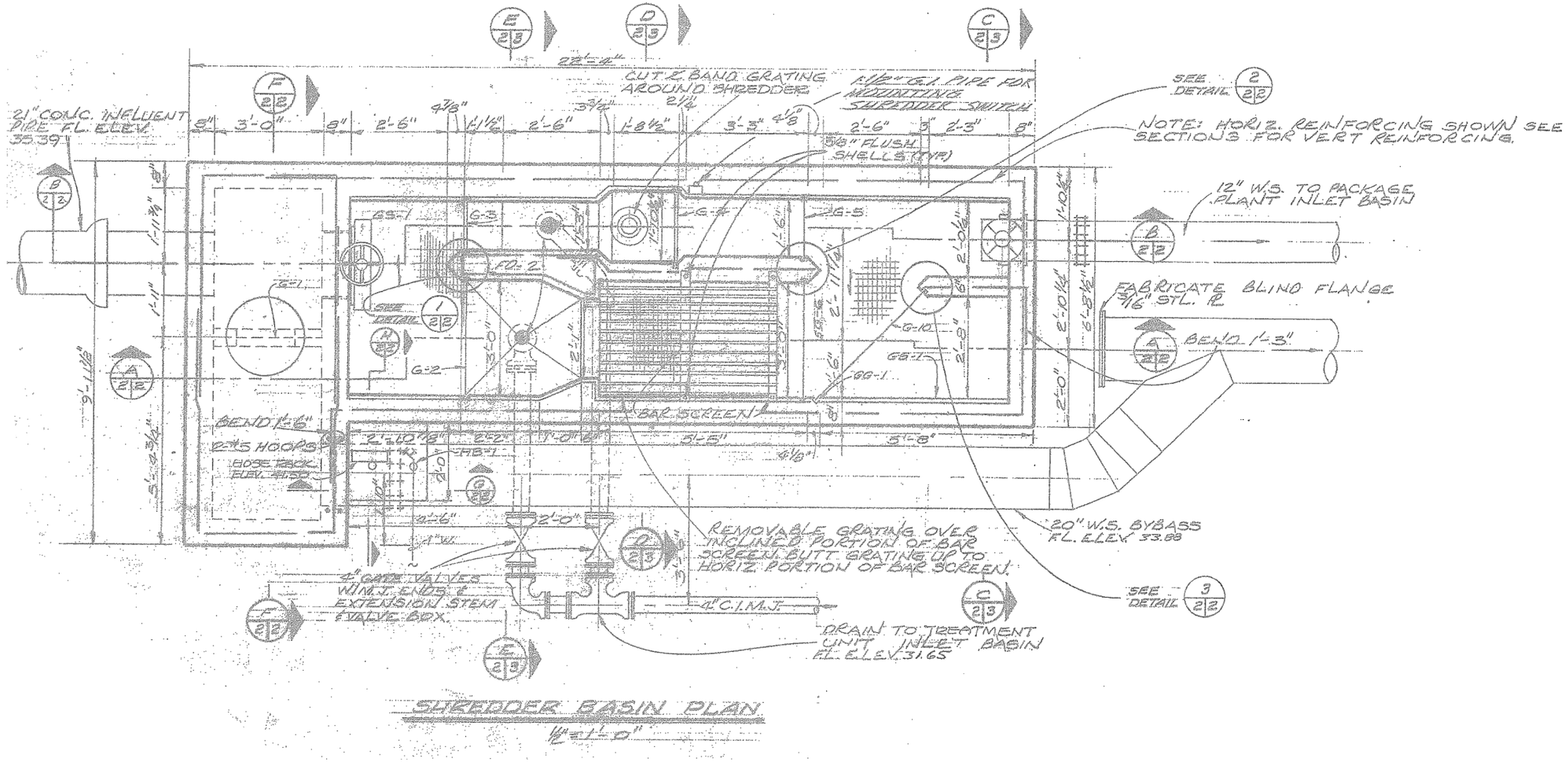

FIGURE 1
ORIGINAL INFLUENT HEADWORKS STRUCTURE PLAN

NOT TO SCALE

NO.	REVISION	BY	DATE
-		---	---
-		---	---
-		---	---
-		---	---
-		---	---
-		---	---

KLEINFELDER
Bright People. Right Solutions.
3500 GATEWAY CENTRE BLVD, STE 200
MORRISVILLE, NC 27560
PH. 919-755-5011 FAX. 919-755-1414
www.kleinfelder.com

PROJ. NO. 127227

ACAD FILE: Fig 1- Inf. Headworks Struct. Plan.dwg

FIGURE 1
ORIGINAL INFLUENT HEADWORKS STRUCTURE PLAN

CITY OF TROUTDALE
TROUTDALE SEWER TREATMENT PLANT
DEMOLITION ACTION PLAN

TROUTDALE OREGON

DESIGNED BY: --
MODIFIED BY: --
CHECKED BY: --
DATE: 06-20-2012
SCALE: NOT TO SCALE

ORIGINAL SCALE IN INCHES FOR REDUCED PLANS
0 0.5 1.0 1.5 2.0

FIG. 1

1 of 1 sheets

PLOTTED: 29 Jun 2012, 3:04pm, cmassey

ATTACHED IMAGES:
ATTACHED XREFS: XRef: Troutdale 11x17 TITLE BLOCK
CAD FILE: W:\Civil\2012\127227 - Troutdale STP Demo Action Plan\Miscellaneous\Figures\CAD\ LAYOUT: FIGURE LAYOUT

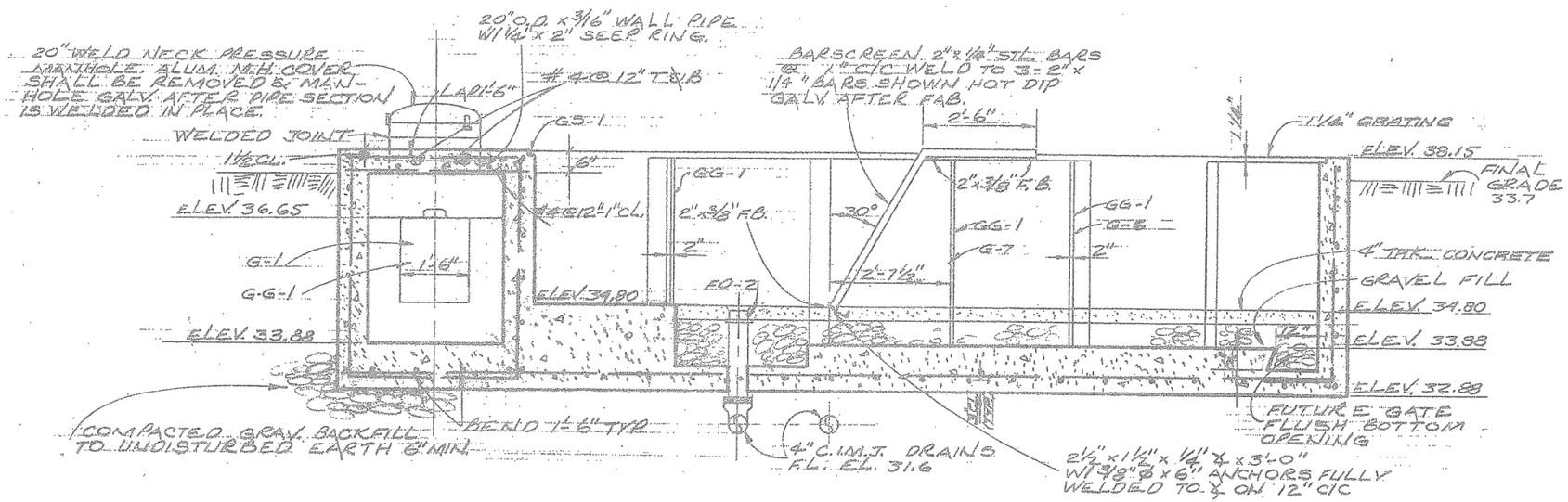

FIGURE 2
ORIGINAL INFLUENT HEADWORKS STRUCTURE SECTION

NOT TO SCALE

NO.	REVISION	BY	DATE
1	-	---	---
2	-	---	---
3	-	---	---
4	-	---	---
5	-	---	---
6	-	---	---

KLEINFELDER
Bright People. Right Solutions.
3500 GATEWAY CENTRE BLVD, STE 200
MORRISVILLE, NC 27560
PH. 919-755-5011 FAX. 919-755-1414
www.kleinfelder.com

ACAD FILE: Fig 2- Inf. Headworks Struct. Sec.dwg
PROJ. NO. 127227

FIGURE 2
ORIGINAL INFLUENT HEADWORKS STRUCTURE SECTION

CITY OF TROUTDALE
TROUTDALE SEWER TREATMENT PLANT
DEMOLITION ACTION PLAN

TROUTDALE OREGON

DESIGNED BY: --
MODIFIED BY: --
CHECKED BY: --
DATE: 06-20-2012
SCALE: NOT TO SCALE

ORIGINAL SCALE IN INCHES FOR REDUCED PLANS
0 0.5 1.0 1.5 2.0

FIG. 2

1 of 1 sheets

PLOTTED: 29 Jun 2012, 3:05pm, cmassey

ATTACHED IMAGES:
ATTACHED XREFS: XRef: Troutdale 11x17 TITLE BLOCK
CAD FILE: W:\Civil\2012\127227 - Troutdale STP Demo Action Plan\Miscellaneous\Figures\CAD LAYOUT: FIGURE LAYOUT

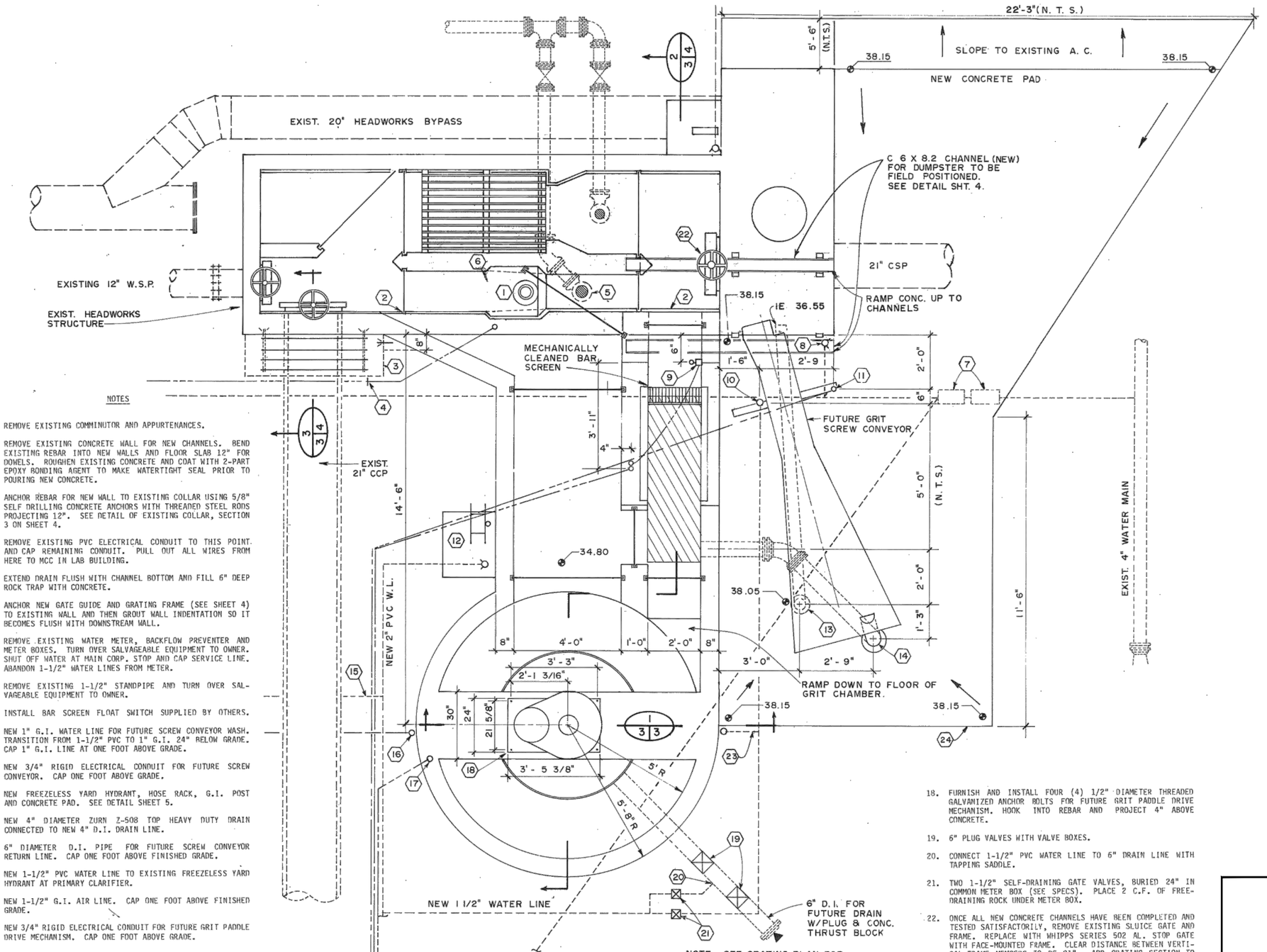

HEADWORKS PLAN

1/2" = 1'-0"

NOTES

1. REMOVE EXISTING COMMINUTOR AND APPURTENANCES.
2. REMOVE EXISTING CONCRETE WALL FOR NEW CHANNELS. BEND EXISTING REBAR INTO NEW WALLS AND FLOOR SLAB 12" FOR DOWELS. ROUGHEN EXISTING CONCRETE AND COAT WITH 2-PART EPOXY BONDING AGENT TO MAKE WATERTIGHT SEAL PRIOR TO POURING NEW CONCRETE.
3. ANCHOR REBAR FOR NEW WALL TO EXISTING COLLAR USING 5/8" SELF DRILLING CONCRETE ANCHORS WITH THREADED STEEL RODS PROJECTING 12". SEE DETAIL OF EXISTING COLLAR, SECTION 3 ON SHEET 4.
4. REMOVE EXISTING PVC ELECTRICAL CONDUIT TO THIS POINT AND CAP REMAINING CONDUIT. PULL OUT ALL WIRES FROM HERE TO MCC IN LAB BUILDING.
5. EXTEND DRAIN FLUSH WITH CHANNEL BOTTOM AND FILL 6" DEEP ROCK TRAP WITH CONCRETE.
6. ANCHOR NEW GATE GUIDE AND GRATING FRAME (SEE SHEET 4) TO EXISTING WALL AND THEN GROUT WALL INDENTATION SO IT BECOMES FLUSH WITH DOWNSTREAM WALL.
7. REMOVE EXISTING WATER METER, BACKFLOW PREVENTER AND METER BOXES. TURN OVER SALVAGEABLE EQUIPMENT TO OWNER. SHUT OFF WATER AT MAIN CORP. STOP AND CAP SERVICE LINE. ABANDON 1-1/2" WATER LINES FROM METER.
8. REMOVE EXISTING 1-1/2" STANDPIPE AND TURN OVER SALVAGEABLE EQUIPMENT TO OWNER.
9. INSTALL BAR SCREEN FLOAT SWITCH SUPPLIED BY OTHERS.
10. NEW 1" G.I. WATER LINE FOR FUTURE SCREW CONVEYOR WASH. TRANSITION FROM 1-1/2" PVC TO 1" G.I. 24" BELOW GRADE. CAP 1" G.I. LINE AT ONE FOOT ABOVE GRADE.
11. NEW 3/4" RIGID ELECTRICAL CONDUIT FOR FUTURE SCREW CONVEYOR. CAP ONE FOOT ABOVE GRADE.
12. NEW FREEZELESS YARD HYDRANT, HOSE RACK, G.I. POST AND CONCRETE PAD. SEE DETAIL SHEET 5.
13. NEW 4" DIAMETER ZURN Z-508 TOP HEAVY DUTY DRAIN CONNECTED TO NEW 4" D.I. DRAIN LINE.
14. 6" DIAMETER D.I. PIPE FOR FUTURE SCREW CONVEYOR RETURN LINE. CAP ONE FOOT ABOVE FINISHED GRADE.
15. NEW 1-1/2" PVC WATER LINE TO EXISTING FREEZELESS YARD HYDRANT AT PRIMARY CLARIFIER.
16. NEW 1-1/2" G.I. AIR LINE. CAP ONE FOOT ABOVE FINISHED GRADE.
17. NEW 3/4" RIGID ELECTRICAL CONDUIT FOR FUTURE GRIT PADDLE DRIVE MECHANISM. CAP ONE FOOT ABOVE GRADE.
18. FURNISH AND INSTALL FOUR (4) 1/2" DIAMETER THREADED GALVANIZED ANCHOR BOLTS FOR FUTURE GRIT PADDLE DRIVE MECHANISM. HOOK INTO REBAR AND PROJECT 4" ABOVE CONCRETE.
19. 6" PLUG VALVES WITH VALVE BOXES.
20. CONNECT 1-1/2" PVC WATER LINE TO 6" DRAIN LINE WITH TAPPING SADDLE.
21. TWO 1-1/2" SELF-DRAINING GATE VALVES, BURIED 24" IN COMMON METER BOX (SEE SPECS). PLACE 2 C.F. OF FREE-DRAINING ROCK UNDER METER BOX.
22. ONCE ALL NEW CONCRETE CHANNELS HAVE BEEN COMPLETED AND TESTED SATISFACTORILY, REMOVE EXISTING SLUICE GATE AND FRAME. REPLACE WITH WHIPPS SERIES 502 AL. STOP GATE WITH FACE-MOUNTED FRAME. CLEAR DISTANCE BETWEEN VERTICAL FRAME MEMBERS TO BE 21". ADD GRATING SECTION TO FILL VOID.
23. NEW 1-1/2" G.I. WATER LINE FOR GRIT AIR LIFT. TRANSITION FROM PVC 24" BELOW GRADE. CAP G.I. ONE FOOT ABOVE GRADE.
24. 6" CONCRETE PAD WITH #4'S AT 12" EW OR WELDED WIRE MESH TO PROVIDE .2% STEEL. SLOPE TO 4" DRAIN.

NO.	REVISION	BY	DATE
-		---	---
-		---	---
-		---	---
-		---	---
-		---	---
-		---	---

KLEINFELDER
Bright People. Right Solutions.
3500 GATEWAY CENTRE BLVD, STE 200
MORRISVILLE, NC 27560
PH. 919-755-5011 FAX. 919-755-1414
www.kleinfelder.com

PROJ. NO. 127227

ACAD FILE: Fig 3- Headworks Modifications Plan.dwg

FIGURE 3 HEADWORKS MODIFICATIONS PLAN

CITY OF TROUTDALE
TROUTDALE SEWER TREATMENT PLANT
DEMOLITION ACTION PLAN

TROUTDALE OREGON

FIGURE 3 HEADWORKS MODIFICATIONS PLAN

NOT TO SCALE

DESIGNED BY: --
MODIFIED BY: --
CHECKED BY: --
DATE: 06-20-2012
SCALE: NOT TO SCALE

ORIGINAL SCALE IN INCHES FOR REDUCED PLANS
0 0.5 1.0 1.5 2.0

FIG. 3

1 of 1 sheets

ATTACHED IMAGES:
ATTACHED XREFS: XRef: Troutdale 11x17 TITLE BLOCK
CAD FILE: W:\Civil\2012\127227 - Troutdale STP Demo Action Plan\Miscellaneous\Figures\CAD\ LAYOUT: FIGURE LAYOUT

PLOTTED: 29 Jun 2012, 3:05pm, cmassey

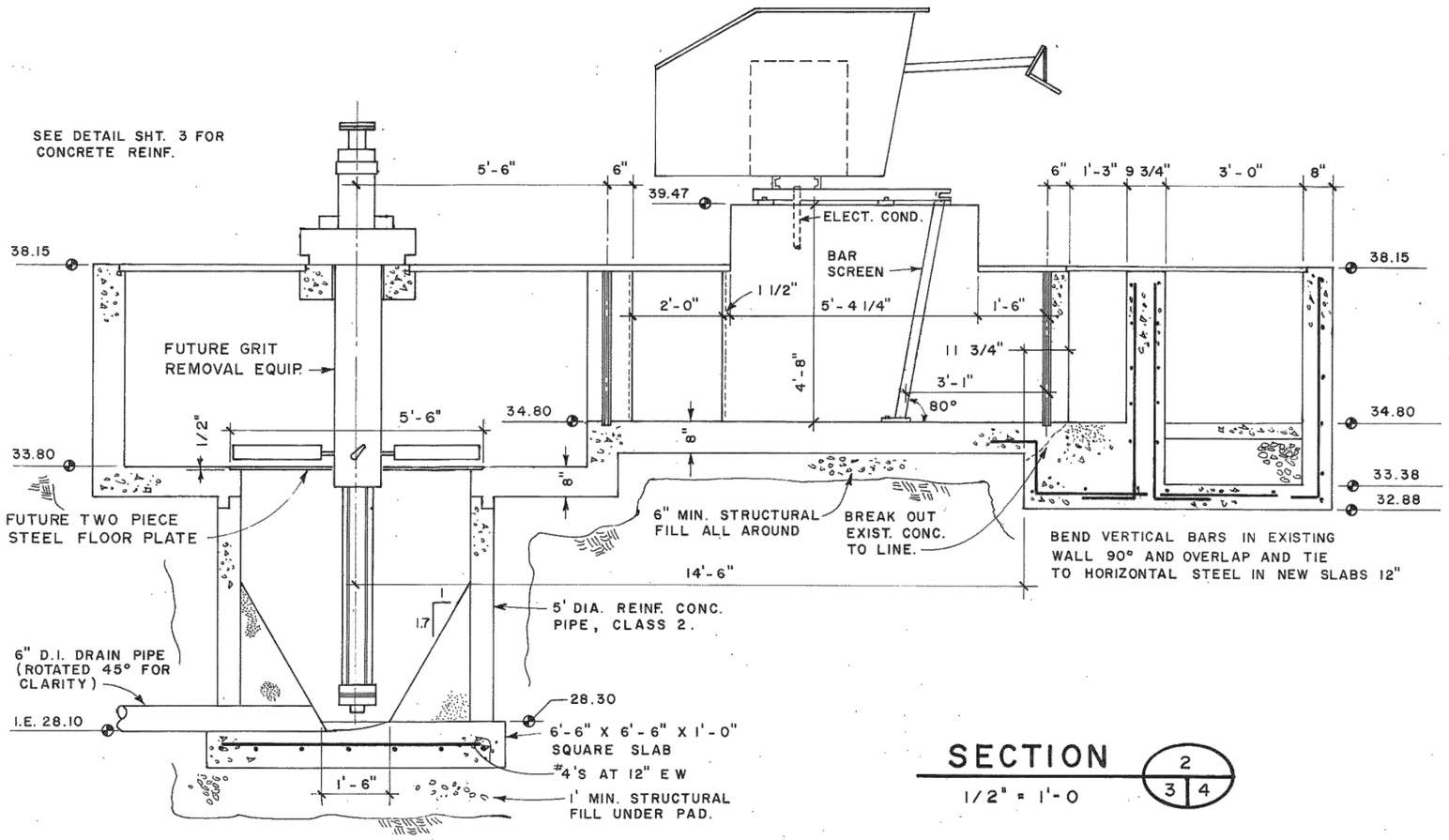

SECTION 2/3 4

1/2" = 1'-0

FIGURE 4
GRIT CHAMBER ADDITION

NOT TO SCALE

NO.	REVISION	BY	DATE
-		---	---
-		---	---
-		---	---
-		---	---
-		---	---
-		---	---

KLEINFELDER
Bright People. Right Solutions.
3500 GATEWAY CENTRE BLVD, STE 200
MORRISVILLE, NC 27560
PH. 919-755-5011 FAX. 919-755-1414
www.kleinfelder.com

PROJ. NO. 127227

ACAD FILE: Fig 4- Grit Chamber Addition.dwg

FIGURE 4
GRIT CHAMBER ADDITION

CITY OF TROUTDALE
TROUTDALE SEWER TREATMENT PLANT
DEMOLITION ACTION PLAN

TROUTDALE OREGON

DESIGNED BY: --
MODIFIED BY: --
CHECKED BY: --
DATE: 06-20-2012
SCALE: NOT TO SCALE

ORIGINAL SCALE IN INCHES FOR REDUCED PLANS
0 0.5 1.0 1.5 2.0

FIG. 4

1 of 1 sheets

PLOTTED: 29 Jun 2012, 3:05pm, cmassey

ATTACHED IMAGES:
ATTACHED XREF: XRef: Troutdale 11x17 TITLE BLOCK
CAD FILE: W:\Civil\2012\127227 - Troutdale STP Demo Action Plan\Miscellaneous\Figures\CAD LAYOUT: FIGURE LAYOUT

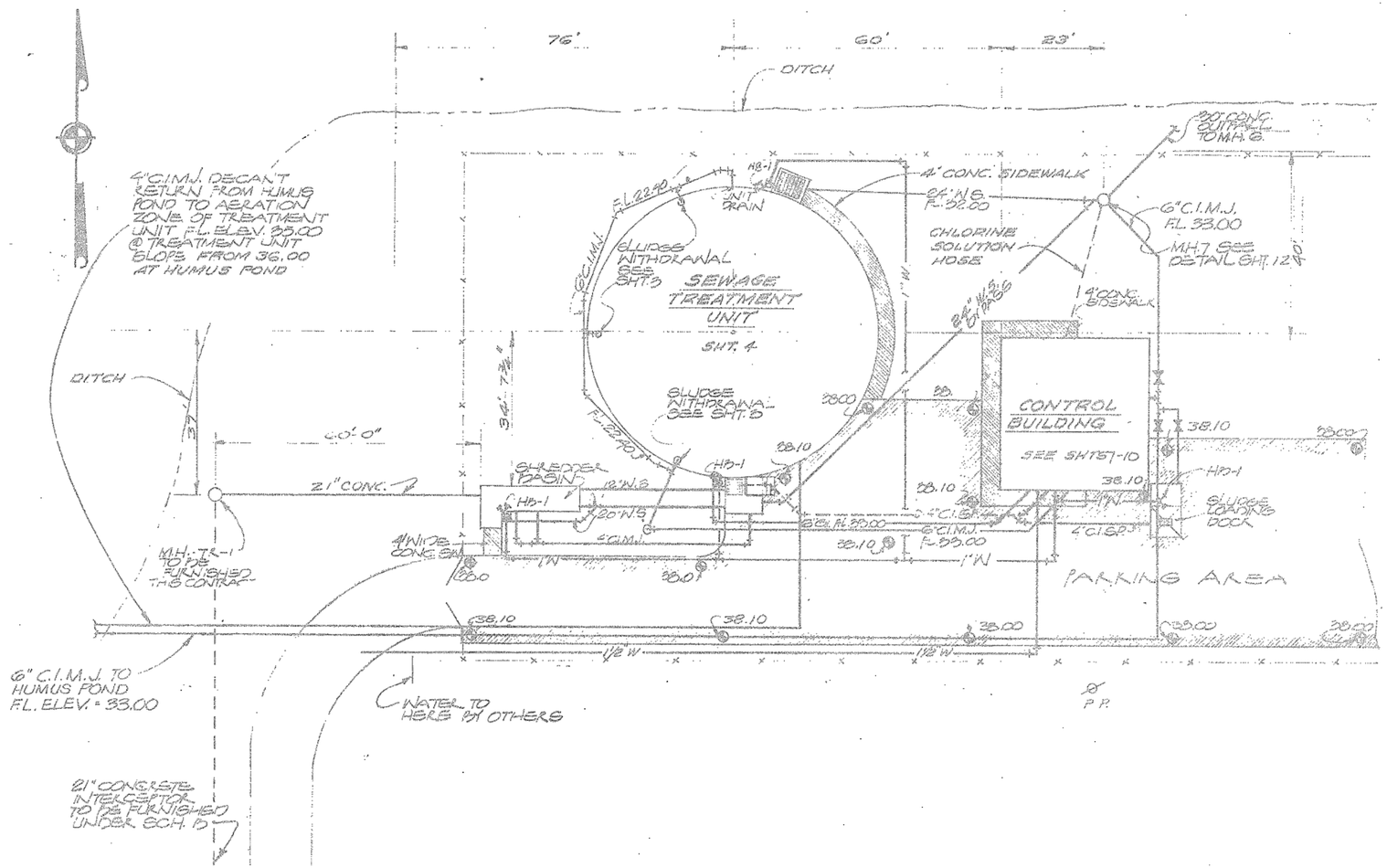

FIGURE 5
ORIGINAL PRIMARY CLARIFIER PIPING

NOT TO SCALE

NO.	REVISION	BY	DATE
-		---	---
-		---	---
-		---	---
-		---	---
-		---	---
-		---	---

KLEINFELDER
Bright People. Right Solutions.
3500 GATEWAY CENTRE BLVD, STE 200
MORRISVILLE, NC 27560
PH. 919-755-5011 FAX. 919-755-1414
www.kleinfelder.com

PROJ. NO. 127227

ACAD FILE: Fig 5- Orig. Primary Clarifier Piping.dwg

FIGURE 5
ORIGINAL PRIMARY CLARIFIER PIPING

CITY OF TROUTDALE
TROUTDALE SEWER TREATMENT PLANT
DEMOLITION ACTION PLAN

TROUTDALE OREGON

DESIGNED BY: --
MODIFIED BY: --
CHECKED BY: --
DATE: 06-20-2012
SCALE: NOT TO SCALE

ORIGINAL SCALE IN INCHES FOR REDUCED PLANS
0 0.5 1.0 1.5 2.0

FIG. 5

1 of 1 sheets

PLOTTED: 29 Jun 2012, 3:05pm, cmassey

ATTACHED IMAGES:
ATTACHED XREFS: XRef: Troutdale 11x17 TITLE BLOCK
CAD FILE: W:\Civil\2012\127227 - Troutdale STP Demo Action Plan\Miscellaneous\Figures\CAD LAYOUT: FIGURE LAYOUT

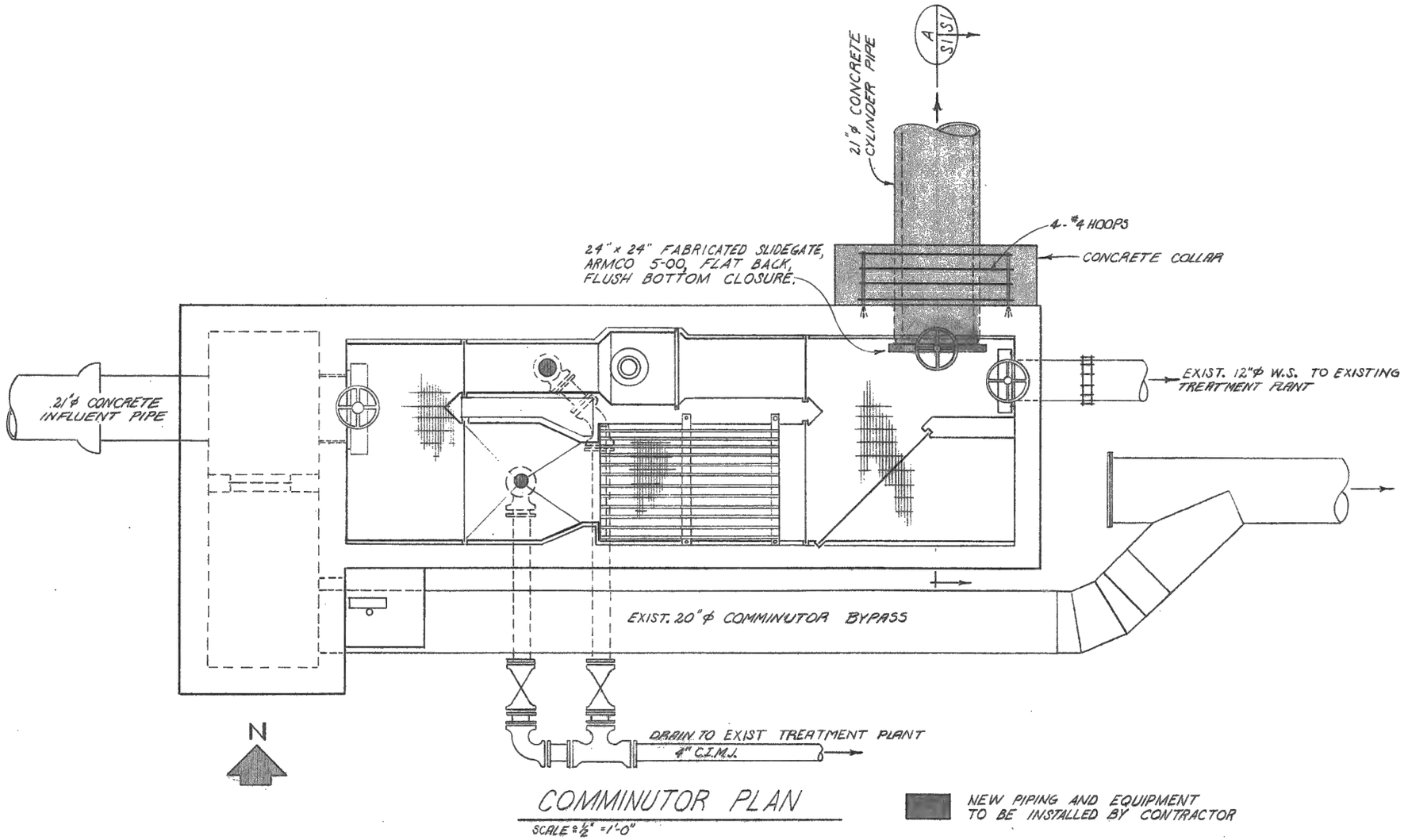

FIGURE 6
COMMINUTOR PLAN WITH 21" INFLUENT PIPE

NOT TO SCALE

NO.	REVISION	BY	DATE
1	-	---	---
2	-	---	---
3	-	---	---
4	-	---	---
5	-	---	---
6	-	---	---

KLEINFELDER
Bright People. Right Solutions.
3500 GATEWAY CENTRE BLVD, STE 200
MORRISVILLE, NC 27560
PH. 919-755-5011 FAX. 919-755-1414
www.kleinfelder.com

PROJ. NO. 127227

ACAD FILE: Fig 6- Comminutor Plan&21in pipe.dwg

FIGURE 6
COMMINUTOR PLAN WITH 21" INFLUENT PIPE

CITY OF TROUTDALE
TROUTDALE SEWER TREATMENT PLANT
DEMOLITION ACTION PLAN

TROUTDALE OREGON

DESIGNED BY: --
MODIFIED BY: --
CHECKED BY: --
DATE: 06-20-2012
SCALE: NOT TO SCALE

ORIGINAL SCALE IN INCHES FOR REDUCED PLANS
0 0.5 1.0 1.5 2.0

FIG. 6

1 of 1 sheets

ATTACHED IMAGES:
ATTACHED XREFS: XRef: Troutdale 11x17 TITLE BLOCK
CAD FILE: W:\Civil\2012\127227 - Troutdale STP Demo Action Plan\Miscellaneous\Figures\CAD LAYOUT: FIGURE LAYOUT

PLOTTED: 29 Jun 2012, 3:05pm, cmassey

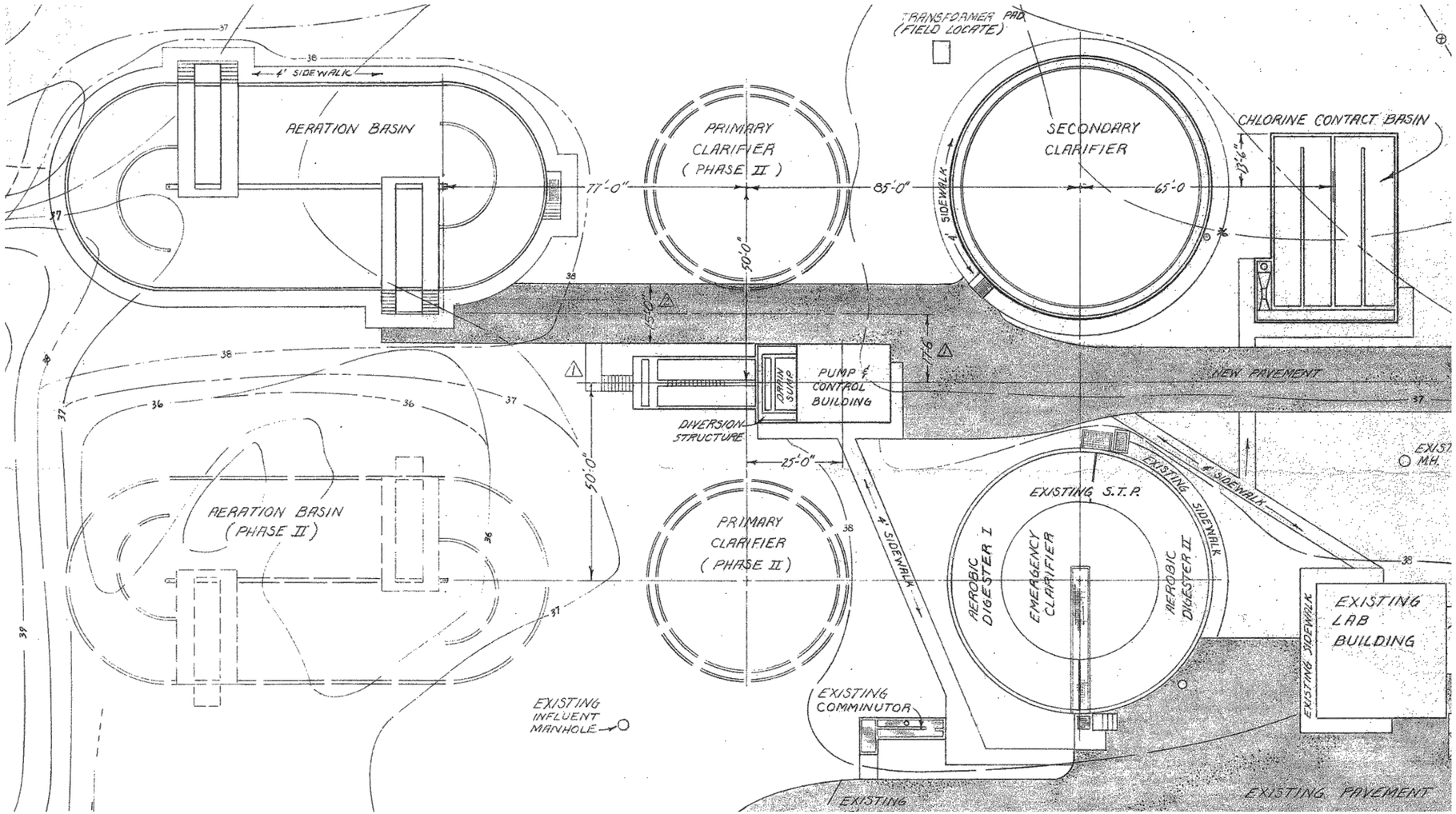

FIGURE 7
SITE PLAN WITH PHASE I EXPANSION

NOT TO SCALE

NO.	REVISION	BY	DATE
1	-	---	---
2	-	---	---
3	-	---	---
4	-	---	---
5	-	---	---
6	-	---	---

KLEINFELDER
Bright People. Right Solutions.
3500 GATEWAY CENTRE BLVD, STE 200
MORRISVILLE, NC 27560
PH. 919-755-5011 FAX. 919-755-1414
www.kleinfelder.com

PROJ. NO. 127227

ACAD FILE: Fig 7- Site Plan-Phase I.dwg

FIGURE 7
SITE PLAN WITH PHASE I EXPANSION

CITY OF TROUTDALE
TROUTDALE SEWER TREATMENT PLANT
DEMOLITION ACTION PLAN

TROUTDALE OREGON

DESIGNED BY: --
MODIFIED BY: --
CHECKED BY: --
DATE: 06-20-2012
SCALE: NOT TO SCALE

ORIGINAL SCALE IN INCHES FOR REDUCED PLANS
0 0.5 1.0 1.5 2.0

FIG. 7

1 of 1 sheets

PLOTTED: 29 Jun 2012, 3:05pm, cmassey

ATTACHED IMAGES:
ATTACHED XREFS: XRef: Troutdale 11x17 TITLE BLOCK
CAD FILE: W:\Civil\2012\127227 - Troutdale STP Demo Action Plan\Miscellaneous\Figures\CAD, LAYOUT: FIGURE LAYOUT

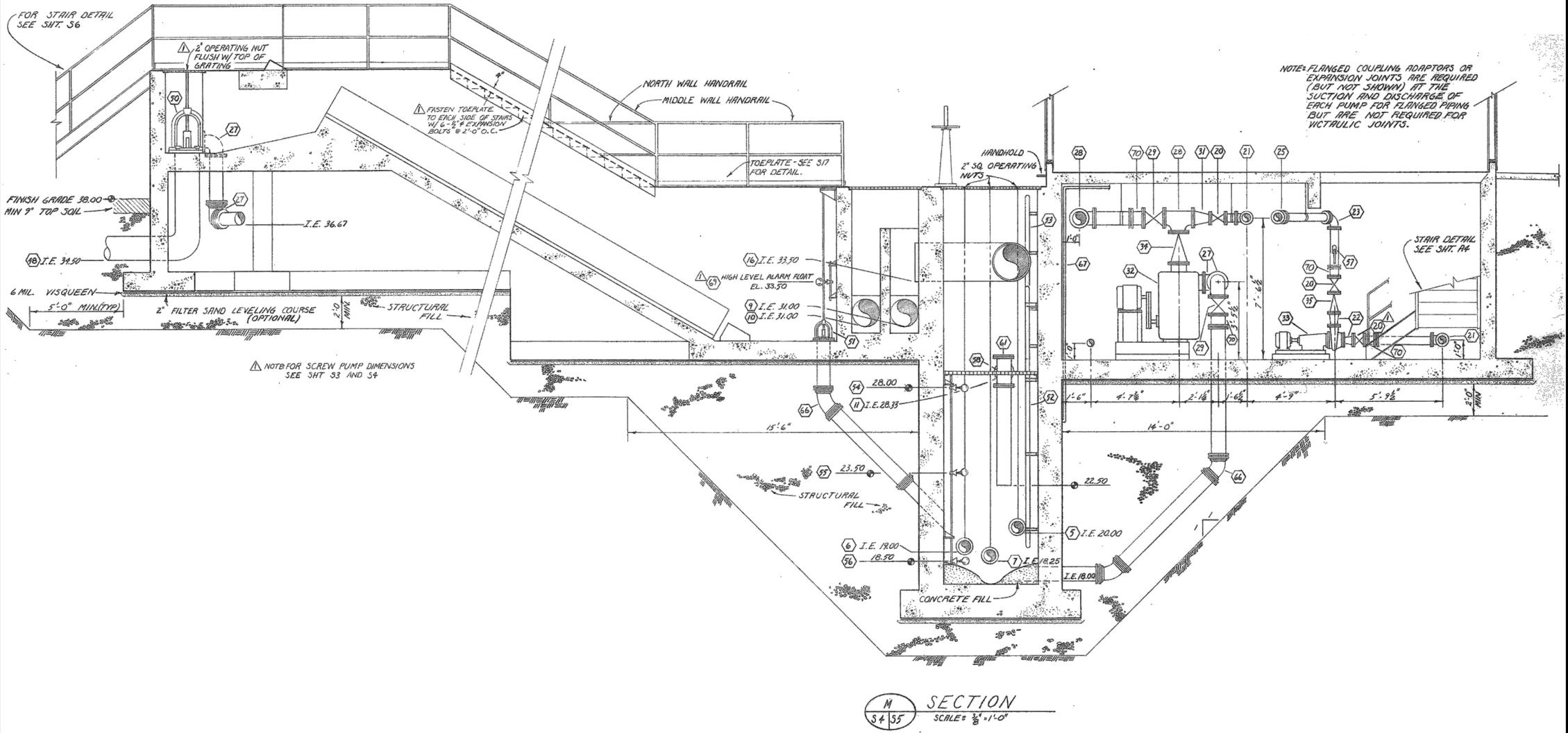

FIGURE 8
SCREW PUMP AND CONTROL BUILDING MECHANICAL SECTION

NOT TO SCALE

NO.	REVISION	BY	DATE
1	-	--	--
2	-	--	--
3	-	--	--
4	-	--	--
5	-	--	--
6	-	--	--

KLEINFELDER
Bright People. Right Solutions.
3500 GATEWAY CENTRE BLVD, STE 200
MORRISVILLE, NC 27560
PH. 919-755-5011 FAX. 919-755-1414
www.kleinfelder.com

PROJ. NO. 127227

ACAD FILE: Fig 8- Screw Pump & Control Mech Sect.dwg

FIGURE 8
SCREW PUMP AND CONTROL BUILDING MECHANICAL SECTION

CITY OF TROUTDALE
TROUTDALE SEWER TREATMENT PLANT
DEMOLITION ACTION PLAN

TROUTDALE OREGON

DESIGNED BY: --
MODIFIED BY: --
CHECKED BY: --
DATE: 06-20-2012
SCALE: NOT TO SCALE

ORIGINAL SCALE IN INCHES FOR REDUCED PLANS
0 0.5 1.0 1.5 2.0

FIG. 8

1 of 1 sheets

ATTACHED IMAGES:
ATTACHED XREFS: XRef: Troutdale 11x17 TITLE BLOCK
CAD FILE: W:\Civil\2012\127227 - Troutdale STP Demo Action Plan\Miscellaneous\Figures\CAD LAYOUT: FIGURE LAYOUT

PLOTTED: 29 Jun 2012, 3:06pm, cmassey

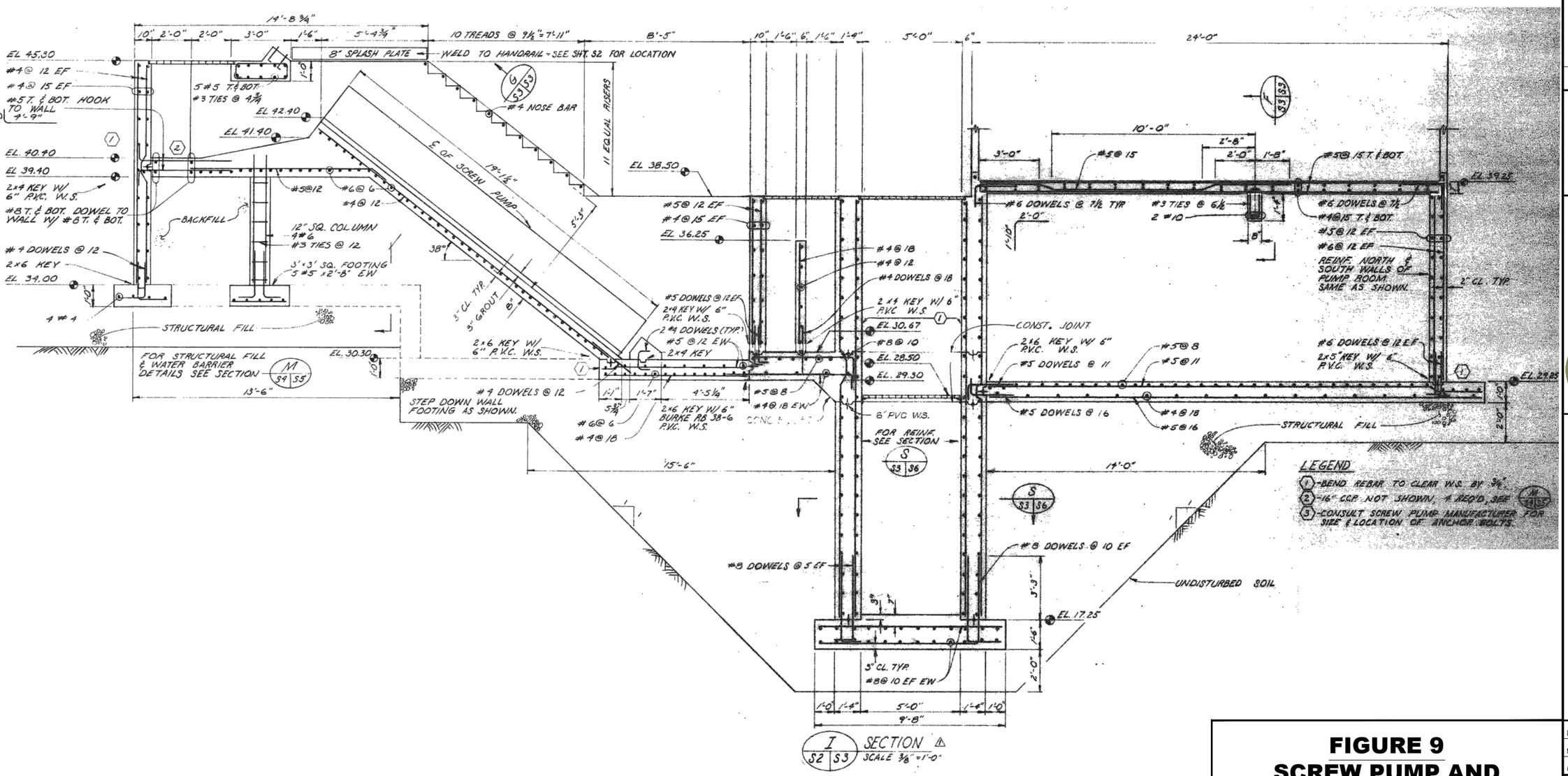

FIGURE 9
SCREW PUMP AND CONTROL BUILDING STRUCTURAL SECTION

NOT TO SCALE

NO.	REVISION	BY	DATE
1	-	---	---
2	-	---	---
3	-	---	---
4	-	---	---
5	-	---	---
6	-	---	---

KLEINFELDER
Bright People. Right Solutions.
3500 GATEWAY CENTRE BLVD, STE 200
MORRISVILLE, NC 27560
PH. 919-755-5011 FAX. 919-755-1414
www.kleinfelder.com

PROJ. NO. 127227

ACAD FILE: Fig 9- Screw Pump & Control Strct Sect.dwg

FIGURE 9
SCREW PUMP AND CONTROL BUILDING STRUCTURAL SECTION

CITY OF TROUTDALE
TROUTDALE SEWER TREATMENT PLANT
DEMOLITION ACTION PLAN

TROUTDALE OREGON

DESIGNED BY: --
MODIFIED BY: --
CHECKED BY: --
DATE: 06-20-2012
SCALE: NOT TO SCALE

ORIGINAL SCALE IN INCHES FOR REDUCED PLANS
0 0.5 1.0 1.5 2.0

FIG. 9

1 of 1 sheets

ATTACHED IMAGES:
ATTACHED XREFS: XRef: Troutdale 11x17 TITLE BLOCK
CAD FILE: W:\Civil\2012\127227 - Troutdale STP Demo Action Plan\Miscellaneous\Figures\CAD LAYOUT: FIGURE LAYOUT

PLOTTED: 29 Jun 2012, 3:06pm, cmassey

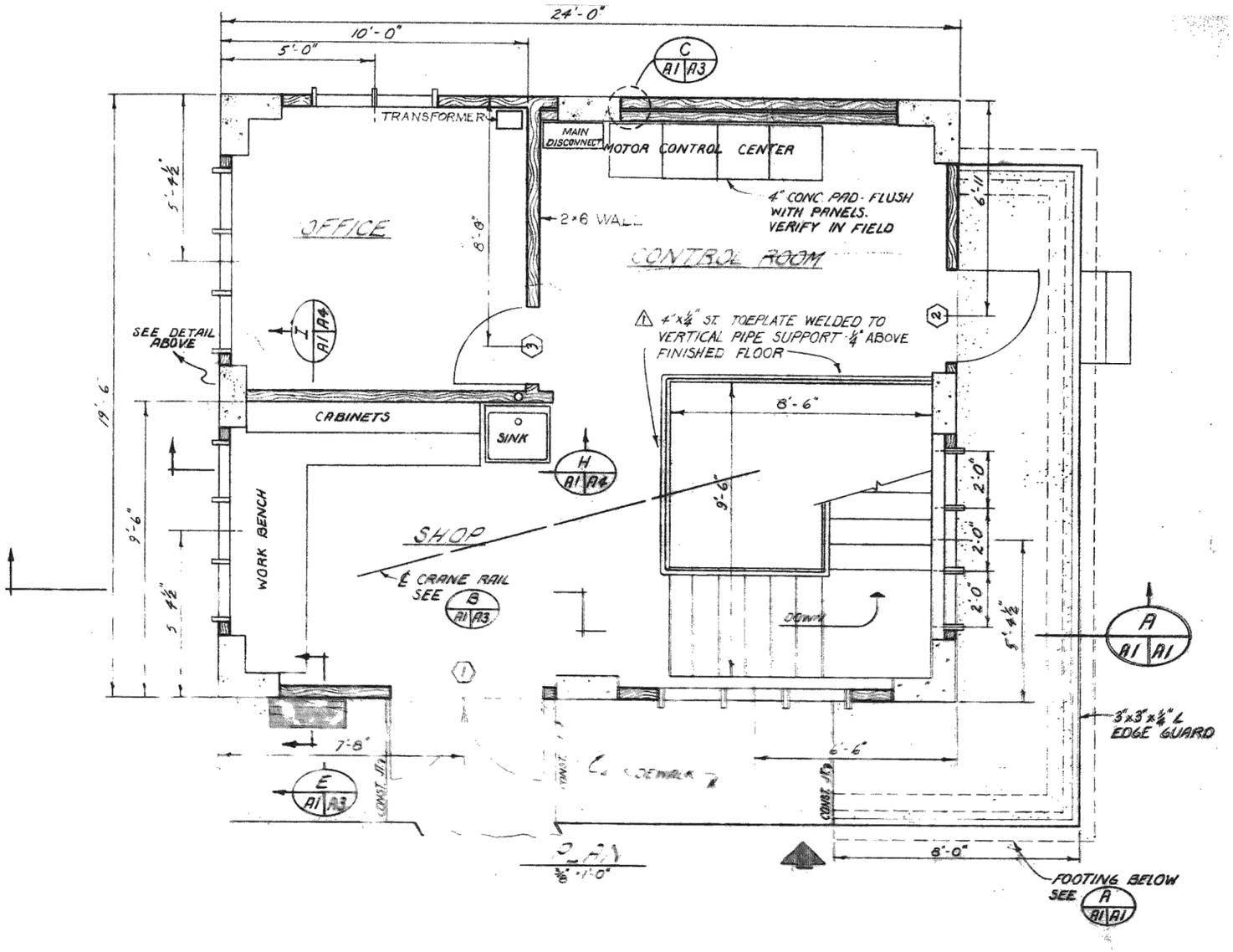

FIGURE 10
CONTROL BUILDING FLOOR PLAN

NOT TO SCALE

NO.	REVISION	BY	DATE
1	-	---	---
2	-	---	---
3	-	---	---
4	-	---	---
5	-	---	---
6	-	---	---

KLEINFELDER
Bright People. Right Solutions.
3500 GATEWAY CENTRE BLVD, STE 200
MORRISVILLE, NC 27560
PH. 919-755-5011 FAX. 919-755-1414
www.kleinfelder.com

PROJ. NO. 127227
ACAD FILE: Fig 10- Control Building Floor Plan.dwg

FIGURE 10
CONTROL BUILDING FLOOR PLAN

CITY OF TROUTDALE
TROUTDALE SEWER TREATMENT PLANT
DEMOLITION ACTION PLAN

TROUTDALE OREGON

DESIGNED BY: --
MODIFIED BY: --
CHECKED BY: --
DATE: 06-20-2012
SCALE: NOT TO SCALE

ORIGINAL SCALE IN INCHES FOR REDUCED PLANS
0 0.5 1.0 1.5 2.0

FIG. 10

1 of 1 sheets

ATTACHED IMAGES:
ATTACHED XREFS: XRef: Troutdale 11x17 TITLE BLOCK
CAD FILE: W:\Civil\2012\127227 - Troutdale STP Demo Action Plan\Miscellaneous\Figures\CAD LAYOUT: FIGURE LAYOUT

PLOTTED: 29 Jun 2012, 3:06pm, cmassey

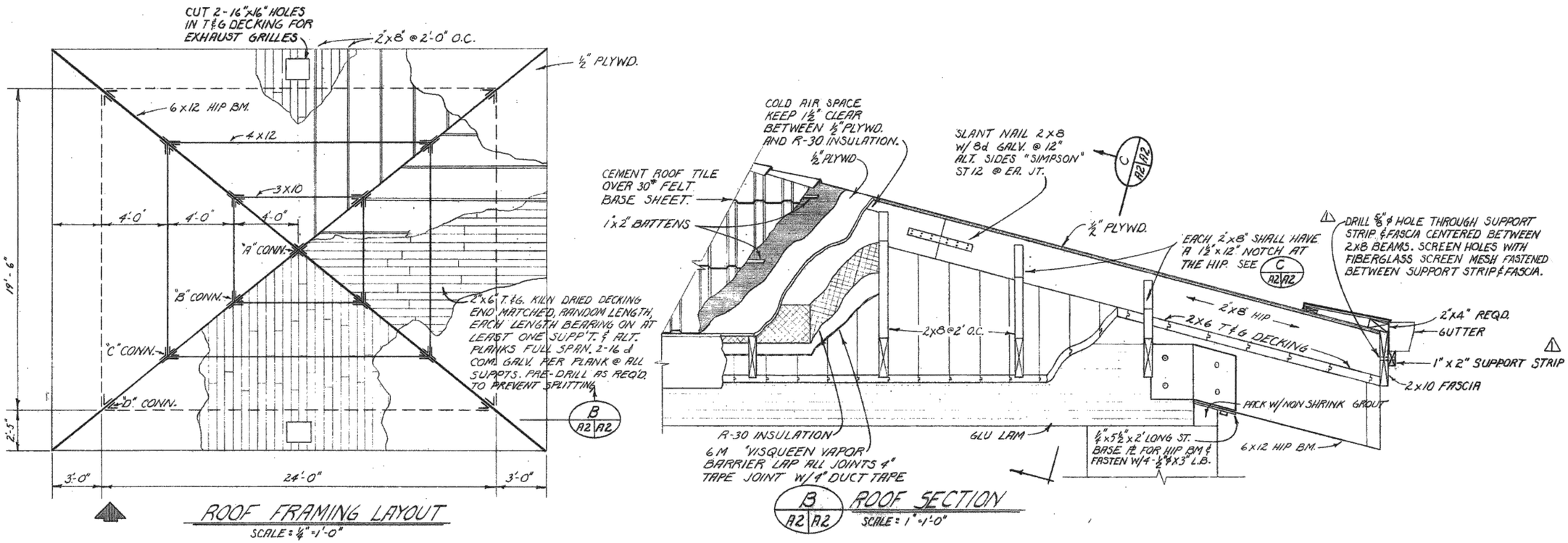

NO.	REVISION	BY	DATE
1	---	---	---
2	---	---	---
3	---	---	---
4	---	---	---
5	---	---	---
6	---	---	---

KLEINFELDER
Bright People. Right Solutions.
3500 GATEWAY CENTRE BLVD, STE 200
MORRISVILLE, NC 27560
PH. 919-755-5011 FAX. 919-755-1414
www.kleinfelder.com

PROJ. NO. 127227

ACAD FILE: Fig 11- Control Building Roof Framing.dwg

FIGURE 11
CONTROL BUILDING ROOF FRAMING

CITY OF TROUTDALE
TROUTDALE SEWER TREATMENT PLANT
DEMOLITION ACTION PLAN

TROUTDALE OREGON

FIGURE 11
CONTROL BUILDING ROOF FRAMING

NOT TO SCALE

DESIGNED BY: --
MODIFIED BY: --
CHECKED BY: --
DATE: 06-20-2012
SCALE: NOT TO SCALE

ORIGINAL SCALE IN INCHES FOR REDUCED PLANS
0 0.5 1.0 1.5 2.0

FIG. 11

1 of 1 sheets

ATTACHED IMAGES:
ATTACHED XREFS: XRef: Troutdale 11x17 TITLE BLOCK
CAD FILE: W:\Civil\2012\127227 - Troutdale STP Demo Action Plan\Miscellaneous\Figures\CAD\ LAYOUT: FIGURE LAYOUT

PLOTTED: 29 Jun 2012, 3:06pm, cmassey

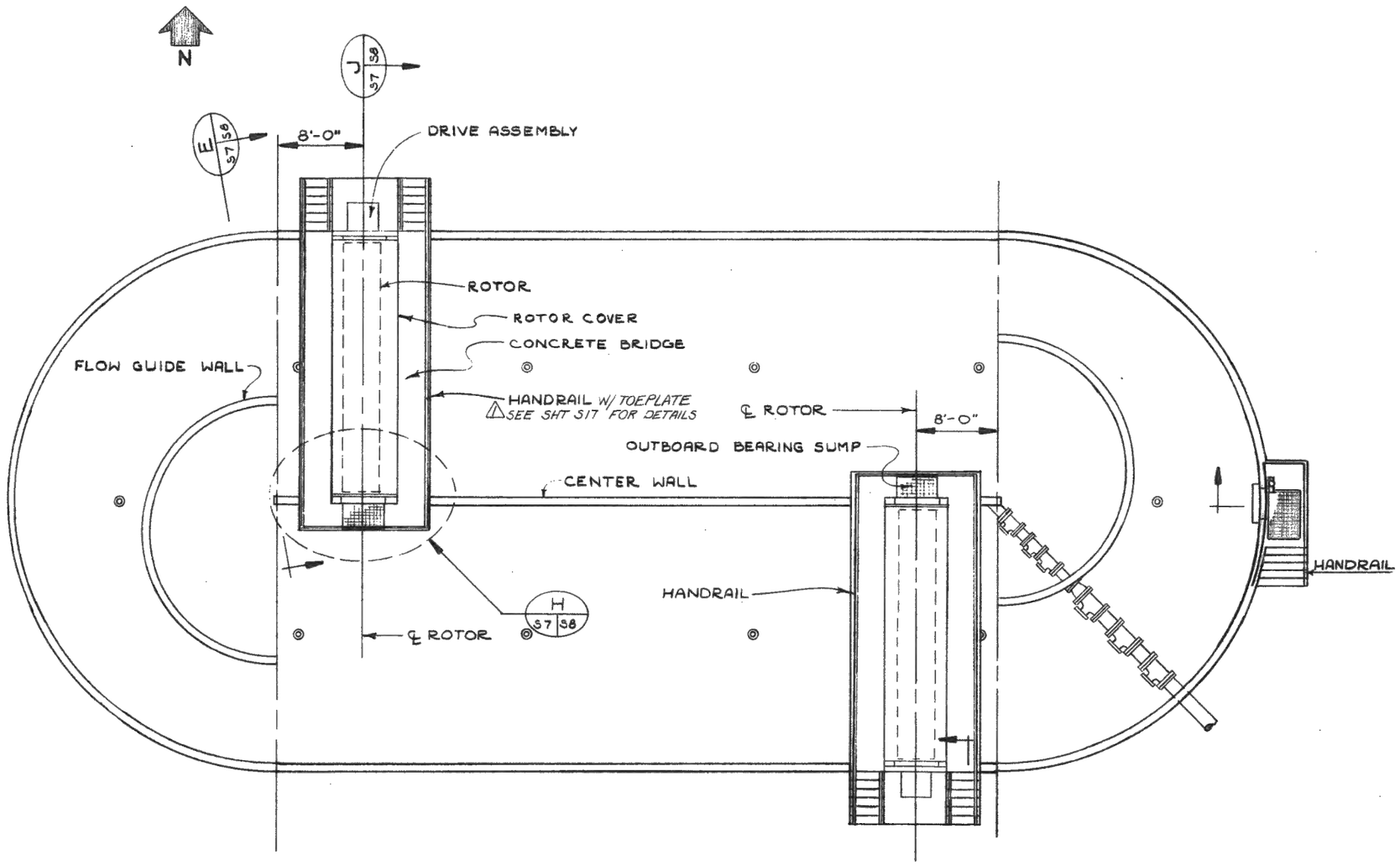

FIGURE 12
AERATION BASIN PLAN

NOT TO SCALE

NO.	REVISION	BY	DATE
1	-	---	---
2	-	---	---
3	-	---	---
4	-	---	---
5	-	---	---
6	-	---	---

KLEINFELDER
Bright People. Right Solutions.
3500 GATEWAY CENTRE BLVD, STE 200
MORRISVILLE, NC 27560
PH. 919-755-5011 FAX. 919-755-1414
www.kleinfelder.com

PROJ. NO. 127227

ACAD FILE: Fig 12- Aeration Basin Plan.dwg

FIGURE 12
AERATION BASIN PLAN

CITY OF TROUTDALE
TROUTDALE SEWER TREATMENT PLANT
DEMOLITION ACTION PLAN

TROUTDALE OREGON

DESIGNED BY: --
MODIFIED BY: --
CHECKED BY: --
DATE: 06-20-2012
SCALE: NOT TO SCALE

ORIGINAL SCALE IN INCHES FOR REDUCED PLANS
0 0.5 1.0 1.5 2.0

FIG. 12

1 of 1 sheets

ATTACHED IMAGES:
ATTACHED XREFS: XRef: Troutdale 11x17 TITLE BLOCK
CAD FILE: W:\Civil\20\127227 - Troutdale STP Demo Action Plan\Miscellaneous\Figures\CAD\ LAYOUT: FIGURE LAYOUT

PLOTTED: 29 Jun 2012, 3:06pm, cmassey

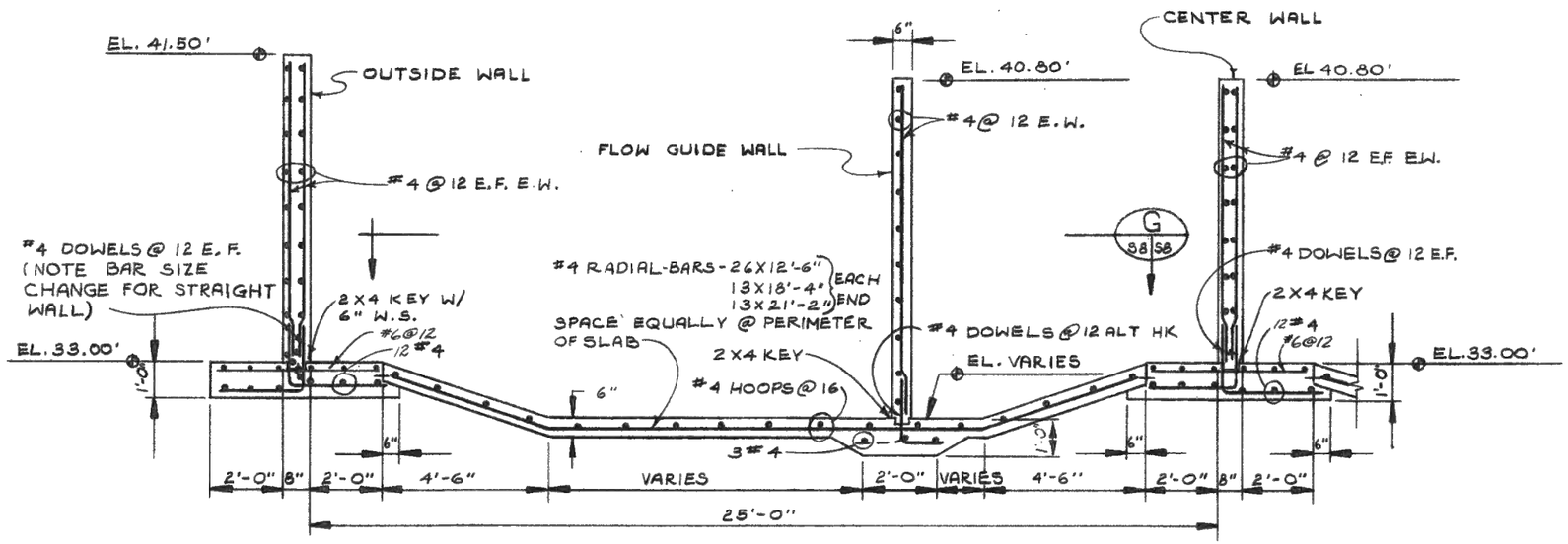

FIGURE 13
AERATION BASIN CROSS SECTION

NOT TO SCALE

NO.	REVISION	BY	DATE
1	-	---	---
2	-	---	---
3	-	---	---
4	-	---	---
5	-	---	---
6	-	---	---

KLEINFELDER
Bright People. Right Solutions.
3500 GATEWAY CENTRE BLVD, STE 200
MORRISVILLE, NC 27560
PH. 919-755-5011 FAX. 919-755-1414
www.kleinfelder.com

PROJ. NO. 127227

ACAD FILE: Fig 13- Aeration Basin X-Sect.dwg

FIGURE 13
AERATION BASIN CROSS SECTION

CITY OF TROUTDALE
TROUTDALE SEWER TREATMENT PLANT
DEMOLITION ACTION PLAN

TROUTDALE OREGON

DESIGNED BY: --
MODIFIED BY: --
CHECKED BY: --
DATE: 06-20-2012
SCALE: NOT TO SCALE

ORIGINAL SCALE IN INCHES FOR REDUCED PLANS
0 0.5 1.0 1.5 2.0

FIG. 13

1 of 1 sheets

PLOTTED: 29 Jun 2012, 3:07pm, cmassey

ATTACHED IMAGES:
ATTACHED XREFS: Xref: Troutdale 11x17 TITLE BLOCK
CAD FILE: W:\Civil\2012\127227 - Troutdale STP Demo Action Plan\Miscellaneous\Figures\CAD LAYOUT: FIGURE LAYOUT

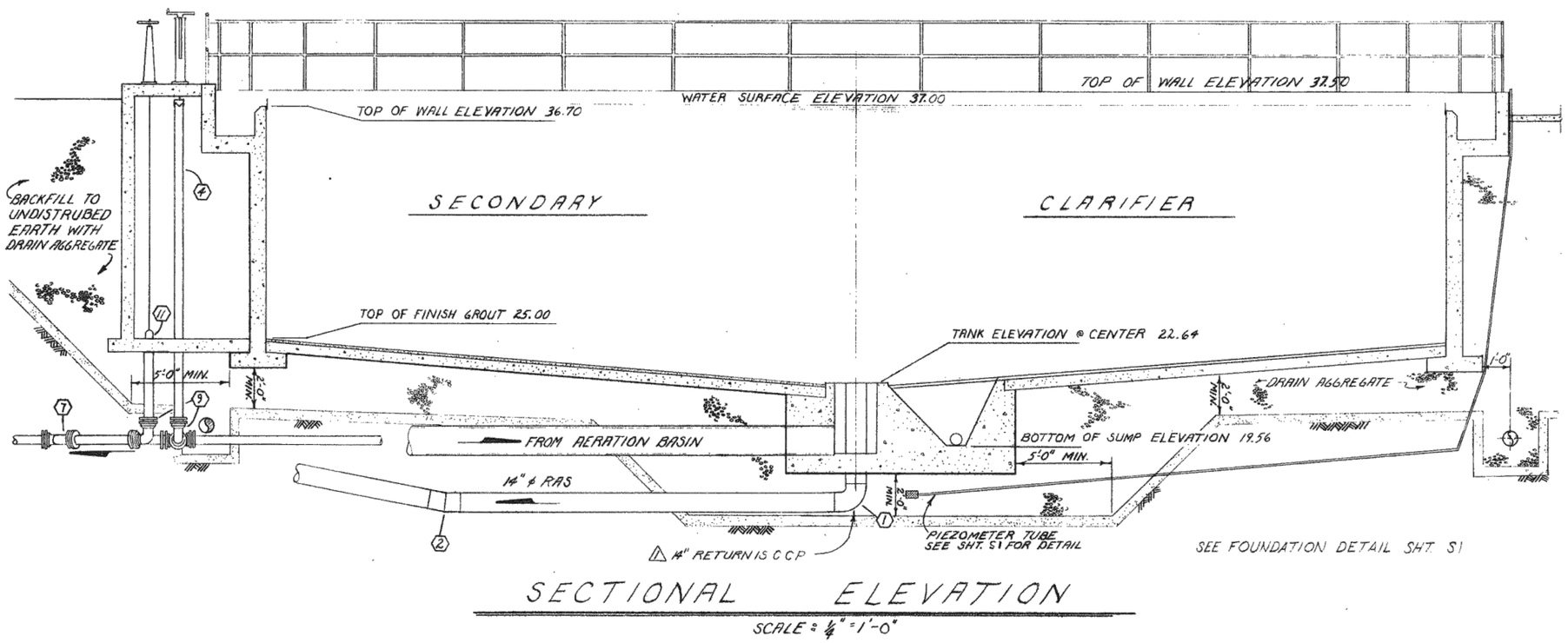

SECTIONAL ELEVATION

SCALE: 1/4" = 1'-0"

FIGURE 14
SECONDARY CLARIFIER SECTION

NOT TO SCALE

NO.	REVISION	BY	DATE
1	-	---	---
2	-	---	---
3	-	---	---
4	-	---	---
5	-	---	---

KLEINFELDER
Bright People. Right Solutions.
3500 GATEWAY CENTRE BLVD, STE 200
MORRISVILLE, NC 27560
PH. 919-755-5011 FAX. 919-755-1414
www.kleinfelder.com

PROJ. NO. 127227

ACAD FILE: Fig 14 - Secondary Clarifier Section.dwg

FIGURE 14
SECONDARY CLARIFIER SECTION

CITY OF TROUTDALE
TROUTDALE SEWER TREATMENT PLANT
DEMOLITION ACTION PLAN

TROUTDALE OREGON

DESIGNED BY: --
MODIFIED BY: --
CHECKED BY: --
DATE: 06-20-2012
SCALE: NOT TO SCALE

ORIGINAL SCALE IN INCHES FOR REDUCED PLANS
0 0.5 1.0 1.5 2.0

FIG. 14

1 of 1 sheets

ATTACHED IMAGES:
ATTACHED XREFS: 30ref Troutdale 11x17 TITLE BLOCK
CAD FILE: W:\Civil\2012\127227 - Troutdale STP Demo Action Plan\Miscellaneous\Figures\CAD LAYOUT: FIGURE LAYOUT

PLOTTED: 29 Jun 2012, 3:07pm, cmassey

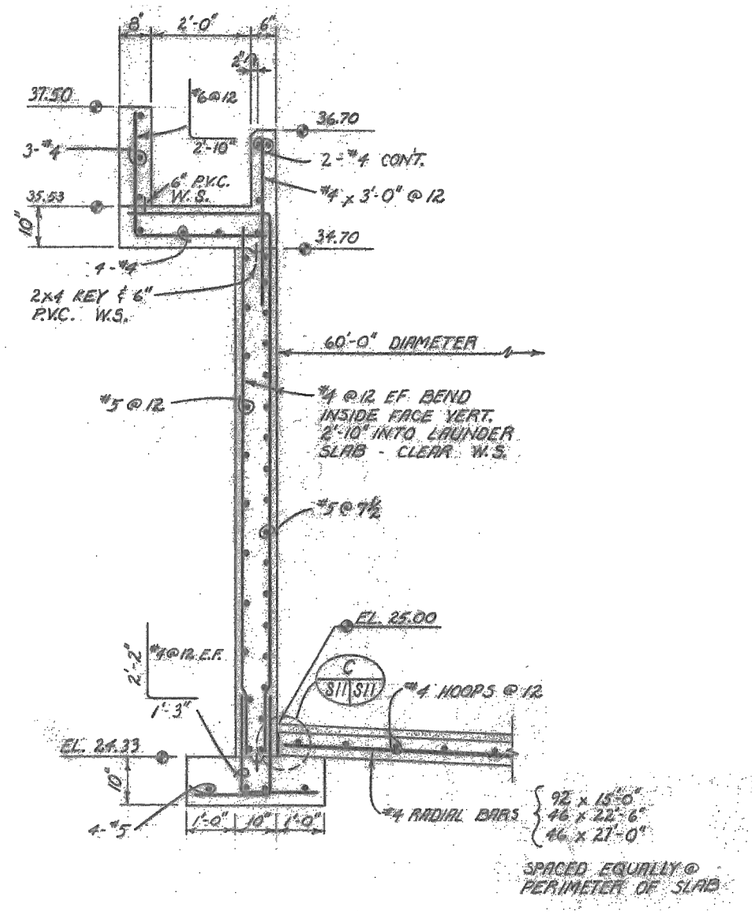

FIGURE 15
SECONDARY CLARIFIER
STRUCTURAL SECTION

NOT TO SCALE

NO.	REVISION	BY	DATE
-		---	---
-		---	---
-		---	---
-		---	---
-		---	---
-		---	---

KLEINFELDER
Bright People. Right Solutions.
3500 GATEWAY CENTRE BLVD, STE 200
MORRISVILLE, NC 27560
PH. 919-755-5011 FAX. 919-755-1414
www.kleinfelder.com

PROJ. NO. 127227
ACAD FILE: Fig 15- Secondary Clarifier Struct Sect.dwg

FIGURE 15
SECONDARY CLARIFIER
STRUCTURAL SECTION

CITY OF TROUTDALE
TROUTDALE SEWER TREATMENT PLANT
DEMOLITION ACTION PLAN

TROUTDALE OREGON

DESIGNED BY: --
MODIFIED BY: --
CHECKED BY: --
DATE: 06-20-2012
SCALE: NOT TO SCALE

ORIGINAL SCALE IN INCHES FOR REDUCED PLANS
0 0.5 1.0 1.5 2.0

FIG. 15

1 of 1 sheets

PLOTTED: 29 Jun 2012, 3:07pm, cmassey

ATTACHED IMAGES:
ATTACHED XREF: XRef: Troutdale 11x17 TITLE BLOCK
CAD FILE: W:\Civil\2012\127227 - Troutdale STP Demo Action Plan\Miscellaneous\Figures\CAD LAYOUT: FIGURE LAYOUT

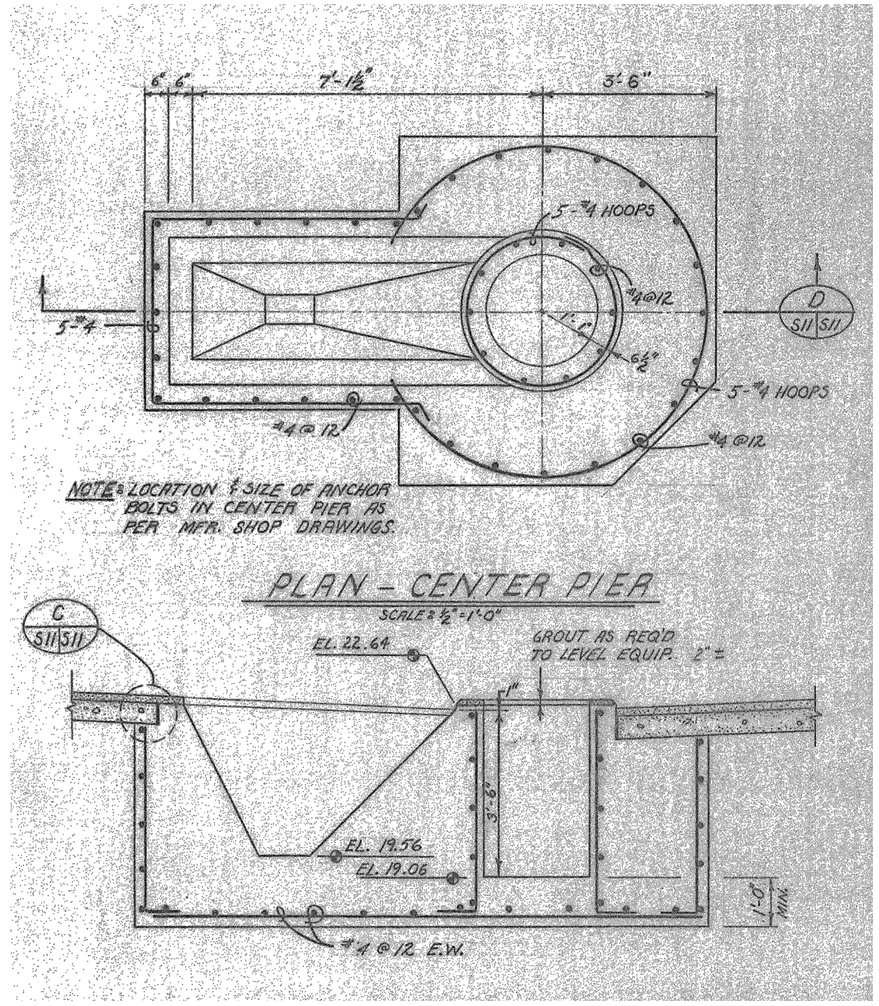

FIGURE 16
SECONDARY CLARIFIER CENTER SUMP

NOT TO SCALE

NO.	REVISION	BY	DATE
△	-	---	---
△	-	---	---
△	-	---	---
△	-	---	---
△	-	---	---

KLEINFELDER
Bright People. Right Solutions.
3500 GATEWAY CENTRE BLVD, STE 200
MORRISVILLE, NC 27560
PH. 919-755-5011 FAX. 919-755-1414
www.kleinfelder.com

PROJ. NO. 127227

ACAD FILE: Fig 16- Secondary Clarifier Center Sump.dwg

FIGURE 16
SECONDARY CLARIFIER CENTER SUMP

CITY OF TROUTDALE
TROUTDALE SEWER TREATMENT PLANT
DEMOLITION ACTION PLAN

TROUTDALE OREGON

DESIGNED BY: --
MODIFIED BY: --
CHECKED BY: --
DATE: 06-20-2012
SCALE: NOT TO SCALE

ORIGINAL SCALE IN INCHES FOR REDUCED PLANS
0 0.5 1.0 1.5 2.0

FIG. 16

1 of 1 sheets

ATTACHED IMAGES:
ATTACHED XREFS: XRef: Troutdale 11x17 TITLE BLOCK
CAD FILE: W:\Civil\2012\127227 - Troutdale STP Demo Action Plan\Miscellaneous\Figures\CAD\ LAYOUT: FIGURE LAYOUT

PLOTTED: 29 Jun 2012, 3:07pm, cmassey

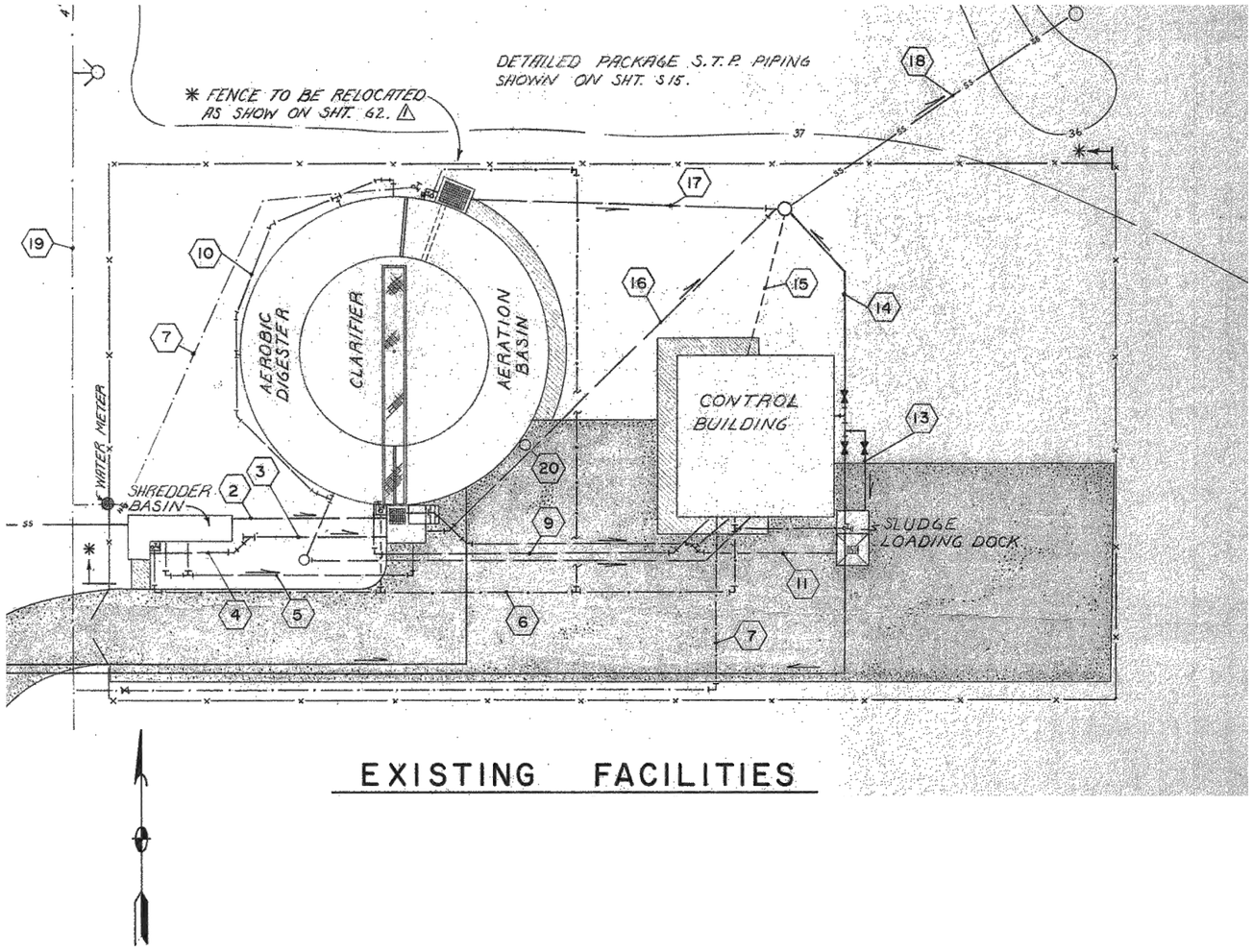

FIGURE 17
EXISTING FACILITIES LAYOUT

NOT TO SCALE

NO.	REVISION	BY	DATE
-		---	---
-		---	---
-		---	---
-		---	---
-		---	---
-		---	---

KLEINFELDER
Bright People. Right Solutions.
3500 GATEWAY CENTRE BLVD, STE 200
MORRISVILLE, NC 27560
PH. 919-755-5011 FAX. 919-755-1414
www.kleinfelder.com

PROJ. NO. 127227
ACAD FILE: Fig 17- Exist Facilities.dwg

FIGURE 17
EXISTING FACILITIES LAYOUT

CITY OF TROUTDALE
TROUTDALE SEWER TREATMENT PLANT
DEMOLITION ACTION PLAN

TROUTDALE OREGON

DESIGNED BY: --
MODIFIED BY: --
CHECKED BY: --
DATE: 06-20-2012
SCALE: NOT TO SCALE

ORIGINAL SCALE IN INCHES FOR REDUCED PLANS
0 0.5 1.0 1.5 2.0

FIG. 17

1 of 1 sheets

ATTACHED IMAGES:
ATTACHED XREFS: XRef: Troutdale 11x17 TITLE BLOCK
CAD FILE: W:\Civil\2012\127227 - Troutdale STP Demo Action Plan\Miscellaneous\Figures\CAD LAYOUT: FIGURE LAYOUT

PLOTTED: 29 Jun 2012, 3:07pm, cmassey

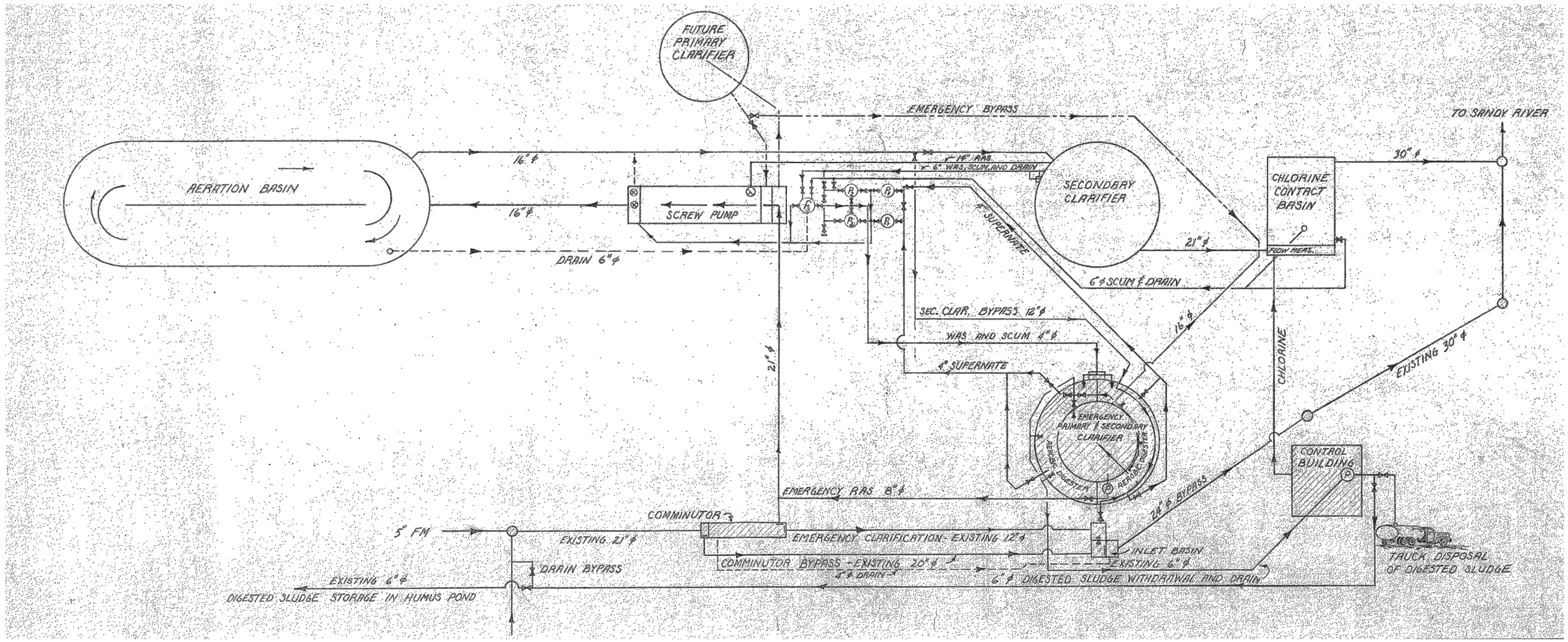

FIGURE 18
FACILITY LAYOUT WTIH PHASE I EXPANSION

NOT TO SCALE

NO.	REVISION	BY	DATE
△	-	---	---
△	-	---	---
△	-	---	---
△	-	---	---
△	-	---	---

KLEINFELDER
Bright People. Right Solutions.
3500 GATEWAY CENTRE BLVD, STE 200
MORRISVILLE, NC 27560
PH. 919-755-5011 FAX. 919-755-1414
www.kleinfelder.com

PROJ. NO. 127227

ACAD FILE: Fig 18- Facility Layout-Phase I.dwg

FIGURE 18
FACILITY LAYOUT WITH PHASE I EXPANSION

CITY OF TROUTDALE
TROUTDALE SEWER TREATMENT PLANT
DEMOLITION ACTION PLAN

TROUTDALE OREGON

DESIGNED BY: --
MODIFIED BY: --
CHECKED BY: --
DATE: 06-20-2012
SCALE: NOT TO SCALE

ORIGINAL SCALE IN INCHES FOR REDUCED PLANS
0 0.5 1.0 1.5 2.0

FIG. 18

1 of 1 sheets

PLOTTED: 29 Jun 2012, 3:07pm, cmassey

ATTACHED IMAGES:
ATTACHED XREFS: XRef: Troutdale 11x17 TITLE BLOCK
CAD FILE: W:\Civil\2012\127227 - Troutdale STP Demo Action Plan\Miscellaneous\Figures\CAD LAYOUT: FIGURE LAYOUT

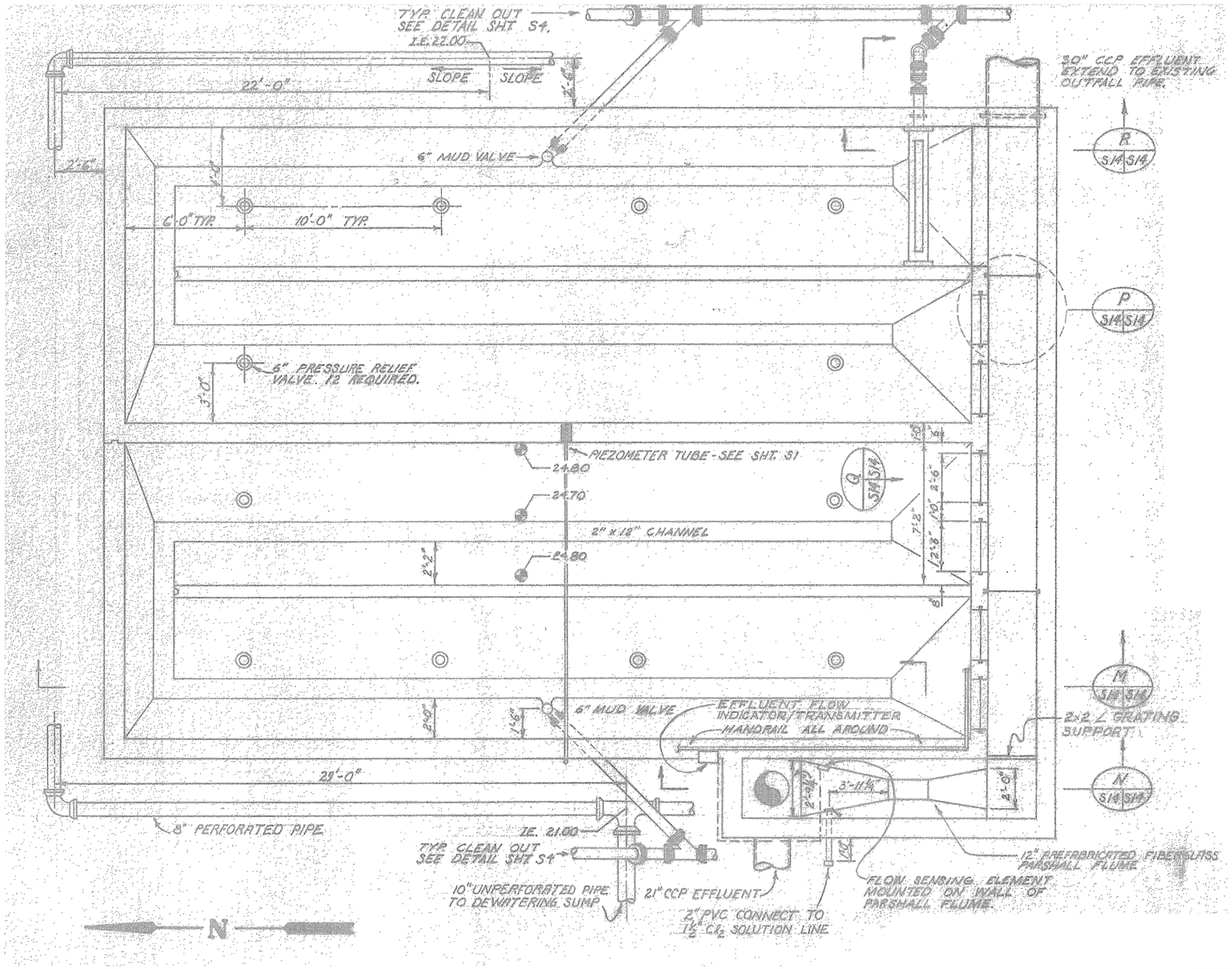

FIGURE 19
CHLORINE CONTACT BASIN PLAN

NOT TO SCALE

NO.	REVISION	BY	DATE
1		---	---
2		---	---
3		---	---
4		---	---
5		---	---
6		---	---

KLEINFELDER
Bright People. Right Solutions.
3500 GATEWAY CENTRE BLVD, STE 200
MORRISVILLE, NC 27560
PH. 919-755-5011 FAX. 919-755-1414
www.kleinfelder.com

PROJ. NO. 127227
ACAD FILE: Fig 19- Chlorine Contact Basin Plan.dwg

FIGURE 19
CHLORINE CONTACT BASIN PLAN

CITY OF TROUTDALE
TROUTDALE SEWER TREATMENT PLANT
DEMOLITION ACTION PLAN

TROUTDALE OREGON

DESIGNED BY: --
MODIFIED BY: --
CHECKED BY: --
DATE: 06-20-2012
SCALE: NOT TO SCALE

ORIGINAL SCALE IN INCHES FOR REDUCED PLANS
0 0.5 1.0 1.5 2.0

FIG. 19

1 of 1 sheets

ATTACHED IMAGES:
ATTACHED XREFS: XRef: Troutdale 11x17 TITLE BLOCK
CAD FILE: W:\Civil\2012\127227 - Troutdale STP Demo Action Plan\Miscellaneous\Figures\CAD LAYOUT: FIGURE LAYOUT

PLOTTED: 29 Jun 2012, 3:07pm, cmassey

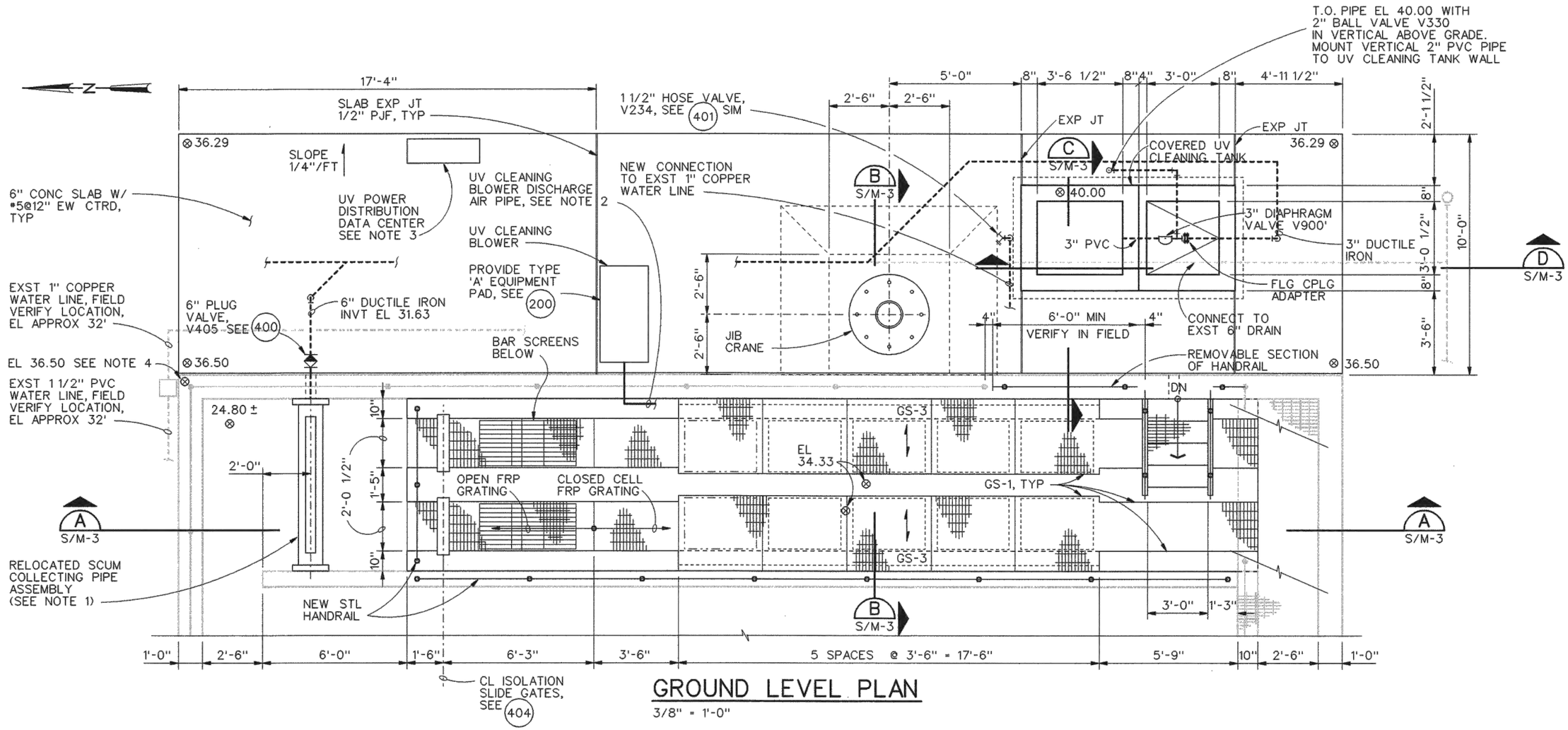

GROUND LEVEL PLAN

3/8" = 1'-0"

FIGURE 20
UV DISINFECTION
GROUND LEVEL PLAN

NOT TO SCALE

NO.	REVISION	BY	DATE
-		-	-
-		-	-
-		-	-
-		-	-
-		-	-
-		-	-

KLEINFELDER
Bright People. Right Solutions.
3500 GATEWAY CENTRE BLVD, STE 200
MORRISVILLE, NC 27560
PH. 919-755-5011 FAX. 919-755-1414
www.kleinfelder.com

ACAD FILE: Fig 20- UV Disinfection.dwg
PROJ. NO. 127227

FIGURE 20
UV DISINFECTION GROUND LEVEL PLAN

CITY OF TROUTDALE
TROUTDALE SEWER TREATMENT PLANT
DEMOLITION ACTION PLAN

TROUTDALE OREGON

DESIGNED BY: --
MODIFIED BY: --
CHECKED BY: --
DATE: 06-20-2012
SCALE: NOT TO SCALE

ORIGINAL SCALE IN INCHES FOR REDUCED PLANS
0 0.5 1.0 1.5 2.0

FIG. 20

1 of 1 sheets

PLOTTED: 29 Jun 2012, 3:08pm, cmassey

ATTACHED IMAGES:
ATTACHED XREFS: 20ref Troutdale 11x17 TITLE BLOCK
CAD FILE: W:\Civil\2012\127227 - Troutdale STP Demo Action Plan\Miscellaneous\Figures\CAD LAYOUT: FIGURE LAYOUT

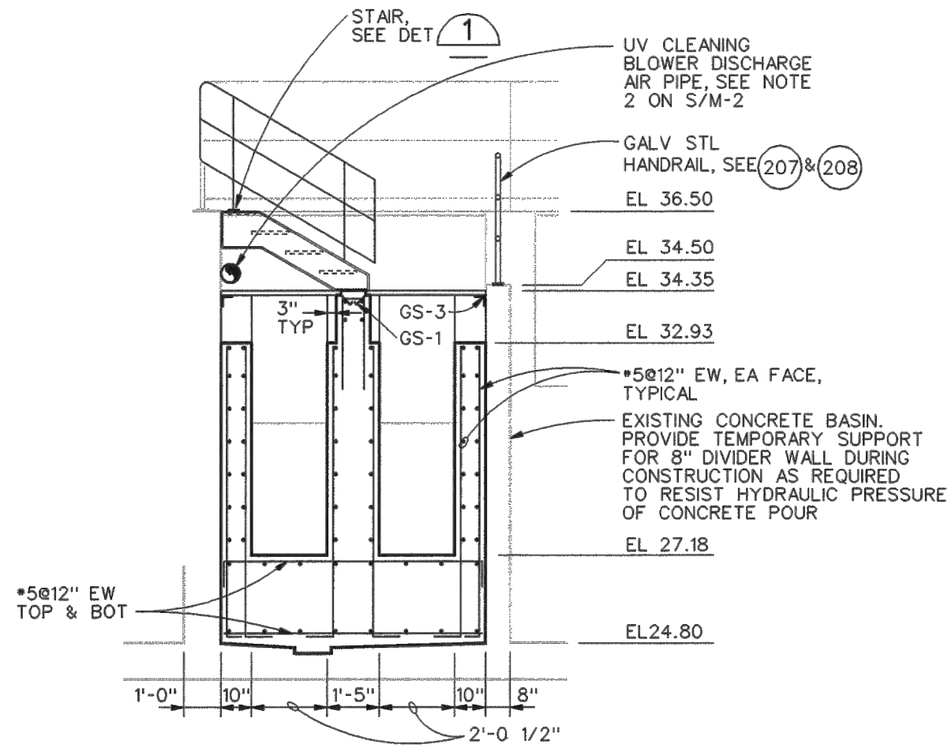

FIGURE 21
UV DISINFECTION CHANNEL CROSS SECTION

NOT TO SCALE

NO.	REVISION	BY	DATE
-		---	---
-		---	---
-		---	---
-		---	---
-		---	---

KLEINFELDER
Bright People. Right Solutions.
3500 GATEWAY CENTRE BLVD, STE 200
MORRISVILLE, NC 27560
PH. 919-755-5011 FAX. 919-755-1414
www.kleinfelder.com

PROJ. NO. 127227
ACAD FILE: Fig 21- UV Disinfection-x-sect.dwg

FIGURE 21
UV DISINFECTION CHANNEL CROSS SECTION

CITY OF TROUTDALE
TROUTDALE SEWER TREATMENT PLANT
DEMOLITION ACTION PLAN

TROUTDALE OREGON

DESIGNED BY: --
MODIFIED BY: --
CHECKED BY: --
DATE: 06-20-2012
SCALE: NOT TO SCALE

ORIGINAL SCALE IN INCHES FOR REDUCED PLANS
0 0.5 1.0 1.5 2.0

FIG. 21

1 of 1 sheets

ATTACHED IMAGES:
ATTACHED AREFS: XRef: Troutdale 11x17 TITLE BLOCK
CAD FILE: W:\Civil\2012\127227 - Troutdale STP Demo Action Plan\Miscellaneous\Figures\CAD LAYOUT: FIGURE LAYOUT

PLOTTED: 29 Jun 2012, 3:08pm, cmassey

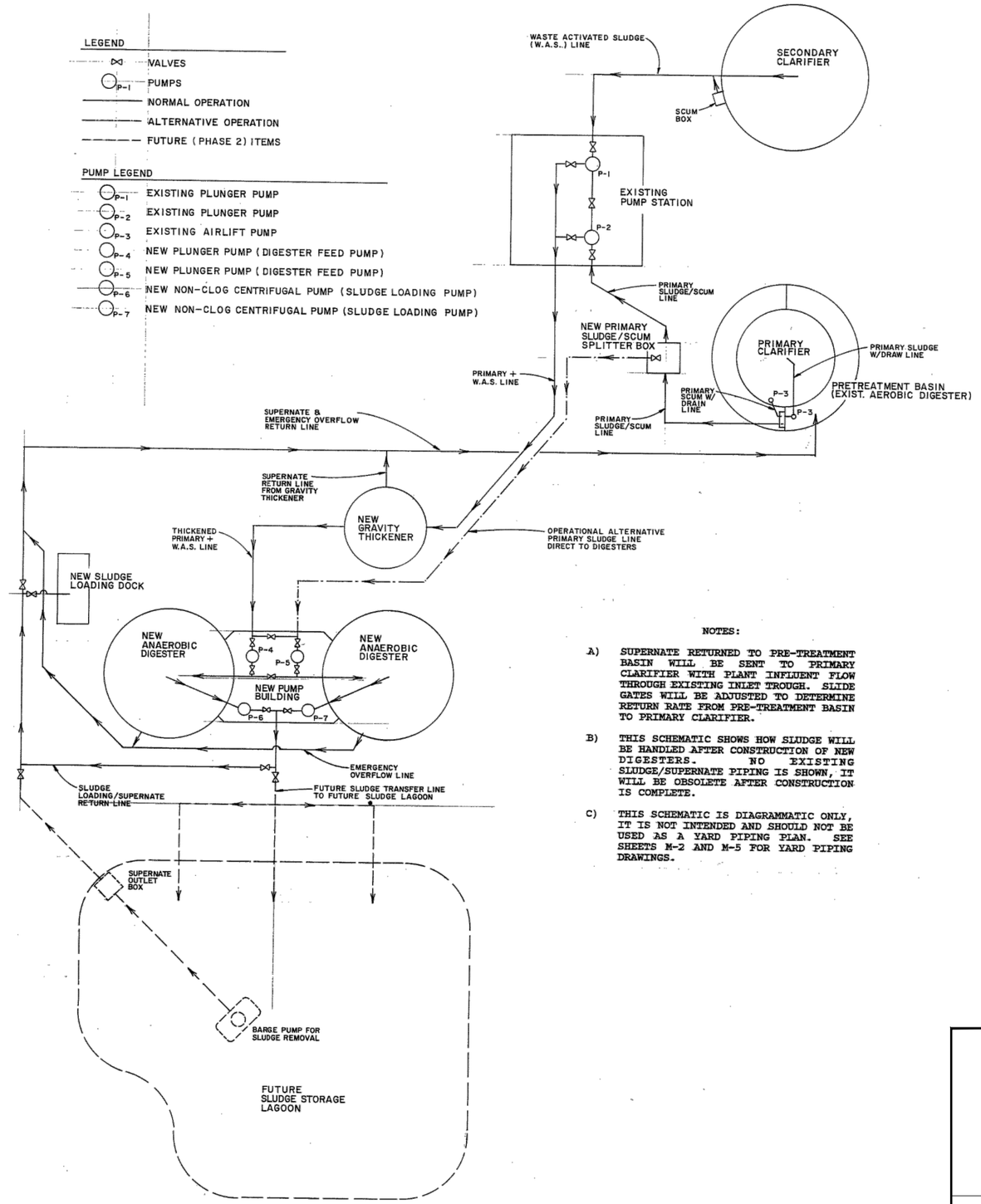

NOTES:

A) SUPERNATE RETURNED TO PRE-TREATMENT BASIN WILL BE SENT TO PRIMARY CLARIFIER WITH PLANT INFLUENT FLOW THROUGH EXISTING INLET TROUGH. SLIDE GATES WILL BE ADJUSTED TO DETERMINE RETURN RATE FROM PRE-TREATMENT BASIN TO PRIMARY CLARIFIER.

B) THIS SCHEMATIC SHOWS HOW SLUDGE WILL BE HANDLED AFTER CONSTRUCTION OF NEW DIGESTERS. NO EXISTING SLUDGE/SUPERNATE PIPING IS SHOWN, IT WILL BE OBSOLETE AFTER CONSTRUCTION IS COMPLETE.

C) THIS SCHEMATIC IS DIAGRAMMATIC ONLY, IT IS NOT INTENDED AND SHOULD NOT BE USED AS A YARD PIPING PLAN. SEE SHEETS M-2 AND M-5 FOR YARD PIPING DRAWINGS.

FIGURE 22
SLUDGE PROCESSING FACILITY PIPING SCHEMATIC

NOT TO SCALE

NO.	REVISION	BY	DATE
-		---	---
-		---	---
-		---	---
-		---	---
-		---	---

KLEINFELDER
Bright People. Right Solutions.
3500 GATEWAY CENTRE BLVD, STE 200
MORRISVILLE, NC 27560
PH. 919-755-5011 FAX. 919-755-1414
www.kleinfelder.com

PROJ. NO. 127227

ACAD FILE: Fig 22 - Sludge Processing Facility Piping Schematic.dwg

FIGURE 22
SLUDGE PROCESSING
FACILITY PIPING SCHEMATIC

CITY OF TROUTDALE
TROUTDALE SEWER TREATMENT PLANT
DEMOLITION ACTION PLAN

TROUTDALE OREGON

DESIGNED BY: --
MODIFIED BY: --
CHECKED BY: --
DATE: 06-20-2012
SCALE: NOT TO SCALE

ORIGINAL SCALE IN INCHES FOR REDUCED PLANS
0 0.5 1.0 1.5 2.0

FIG. 22

1 of 1 sheets

PLOTTED: 29 Jun 2012, 3:08pm, cmassey

ATTACHED IMAGES:
ATTACHED XREFS: XRef: Troutdale 11x17 TITLE BLOCK
CAD FILE: W:\Civil\2012\127227 - Troutdale STP Demo Action Plan\Miscellaneous\Figures\CAD LAYOUT: FIGURE LAYOUT

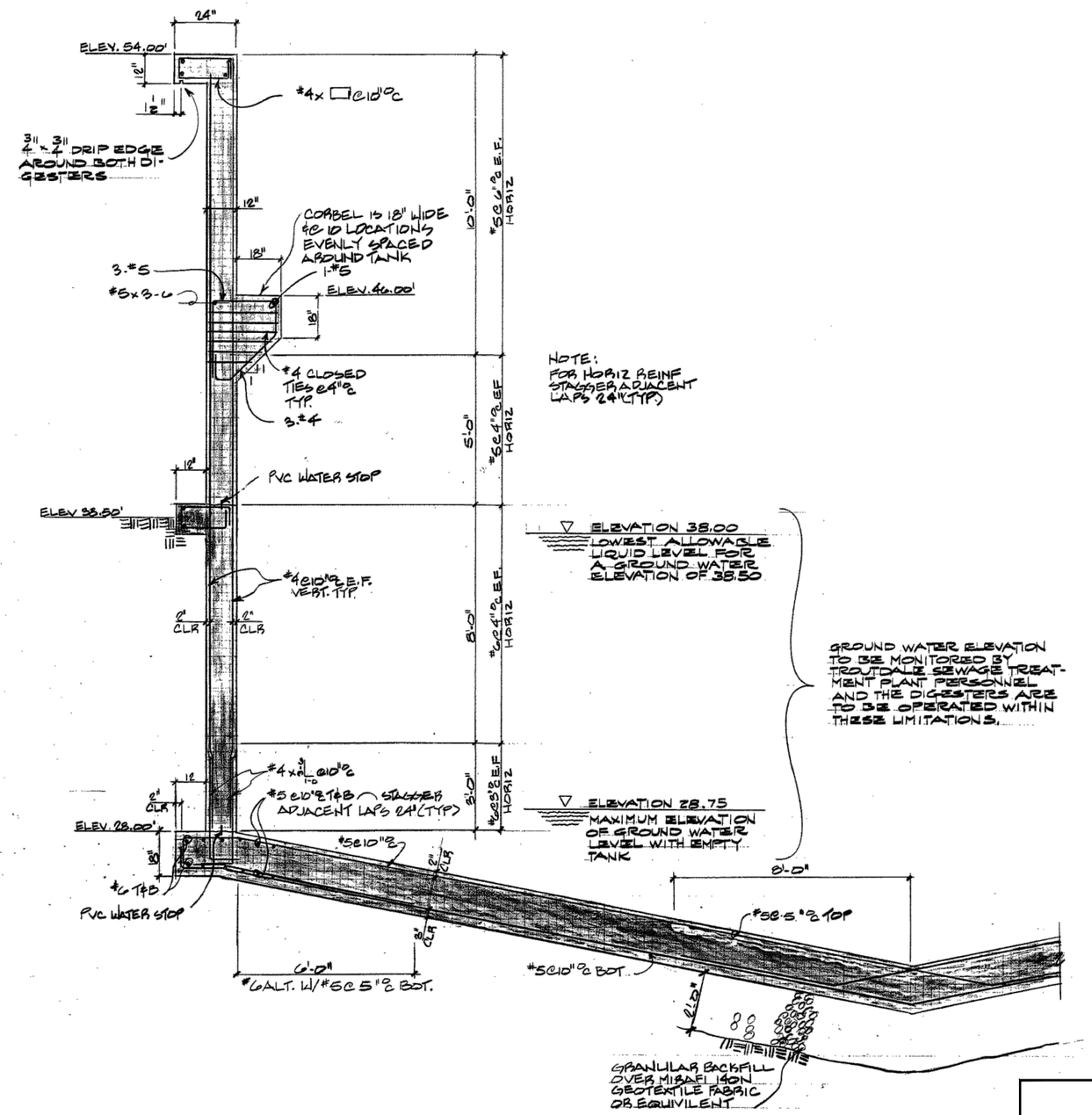

NOTE:
FOR HORIZ REINF STAGGER ADJACENT LAPS 24" (TYP)

FIGURE 23
DIGESTER WALLS CROSS SECTION

NOT TO SCALE

NO.	REVISION	BY	DATE
1	-	---	---
2	-	---	---
3	-	---	---
4	-	---	---
5	-	---	---
6	-	---	---

KLEINFELDER
Bright People. Right Solutions.
3500 GATEWAY CENTRE BLVD, STE 200
MORRISVILLE, NC 27560
PH. 919-755-5011 FAX. 919-755-1414
www.kleinfelder.com

PROJ. NO. 127227
ACAD FILE: Fig 23 - Digester Walls Cross Section.dwg

FIGURE 23
DIGESTER WALLS CROSS SECTION

CITY OF TROUTDALE
TROUTDALE SEWER TREATMENT PLANT
DEMOLITION ACTION PLAN

TROUTDALE OREGON

DESIGNED BY: --
MODIFIED BY: --
CHECKED BY: --
DATE: 06-20-2012
SCALE: NOT TO SCALE

ORIGINAL SCALE IN INCHES FOR REDUCED PLANS
0 0.5 1.0 1.5 2.0

FIG. 23

1 of 1 sheets

ATTACHED IMAGES:
ATTACHED XREFS: XRef: Troutdale 11x17 TITLE BLOCK
CAD FILE: W:\Civil\0312127227 - Troutdale STP Demo Action Plan\Miscellaneous\Figures\CAD LAYOUT: FIGURE LAYOUT

PLOTTED: 29 Jun 2012, 3:08pm, cmassey

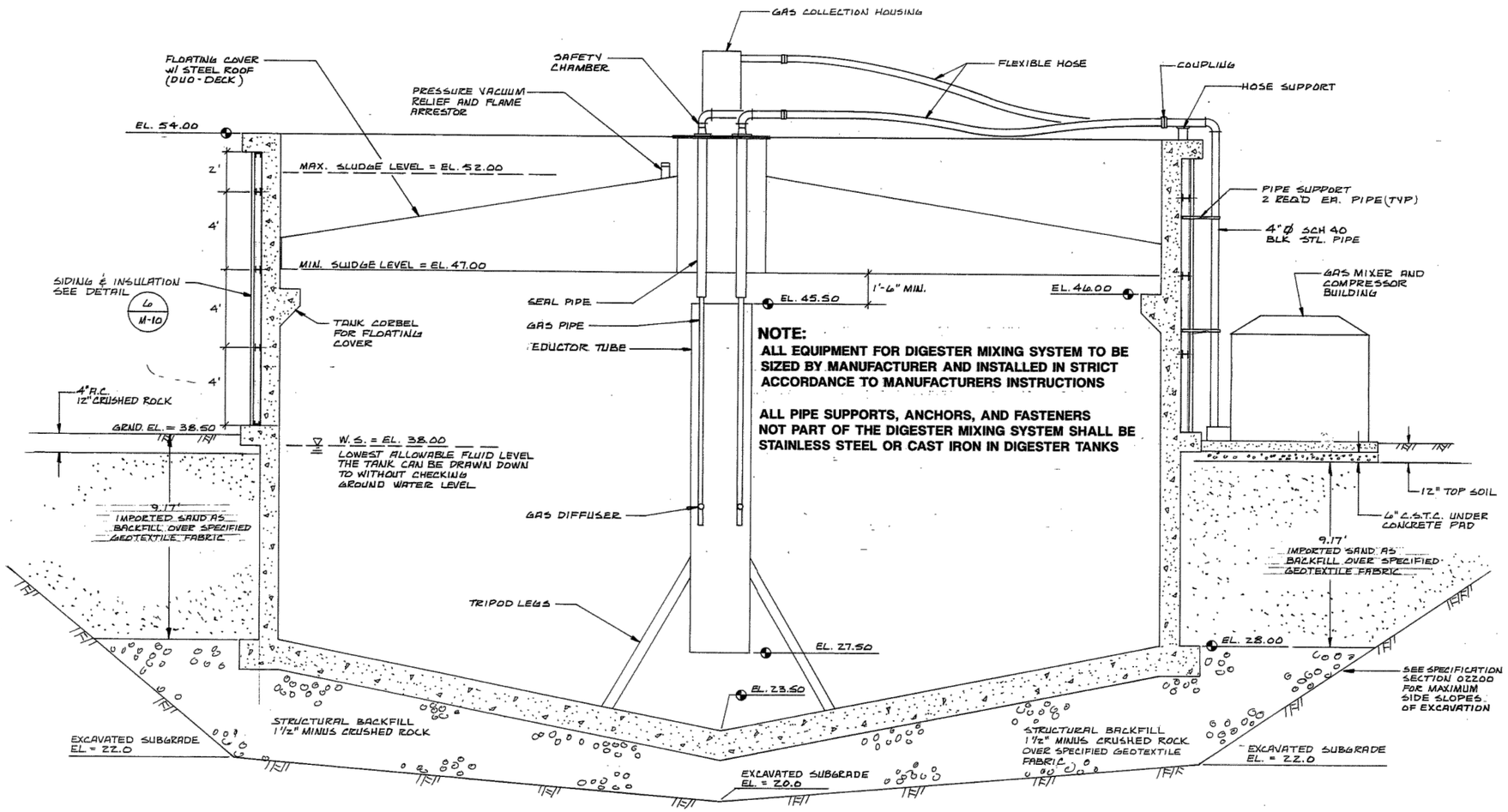

NOTE:

ALL EQUIPMENT FOR DIGESTER MIXING SYSTEM TO BE SIZED BY MANUFACTURER AND INSTALLED IN STRICT ACCORDANCE TO MANUFACTURERS INSTRUCTIONS

ALL PIPE SUPPORTS, ANCHORS, AND FASTENERS NOT PART OF THE DIGESTER MIXING SYSTEM SHALL BE STAINLESS STEEL OR CAST IRON IN DIGESTER TANKS

FIGURE 24
DIGESTER COVER & WALLS CROSS SECTION

NOT TO SCALE

NO.	REVISION	BY	DATE
-		---	---
-		---	---
-		---	---
-		---	---
-		---	---
-		---	---

KLEINFELDER
Bright People. Right Solutions.
3500 GATEWAY CENTRE BLVD, STE 200
MORRISVILLE, NC 27560
PH. 919-755-5011 FAX. 919-755-1414
www.kleinfelder.com

PROJ. NO. 127227

ACAD FILE: Fig 24 - Digester Cover & Walls Cross Section.dwg

FIGURE 24
DIGESTER COVER & WALLS CROSS SECTION

CITY OF TROUTDALE
TROUTDALE SEWER TREATMENT PLANT
DEMOLITION ACTION PLAN

TROUTDALE OREGON

DESIGNED BY: --
MODIFIED BY: --
CHECKED BY: --
DATE: 06-20-2012
SCALE: NOT TO SCALE

ORIGINAL SCALE IN INCHES FOR REDUCED PLANS
0 0.5 1.0 1.5 2.0

FIG. 24

1 of 1 sheets

ATTACHED IMAGES:
ATTACHED XREFS: XRef: Troutdale 11x17 TITLE BLOCK
CAD FILE: W:\Civil\2012\127227 - Troutdale STP Demo Action Plan\Miscellaneous\Figures\CAD LAYOUT: FIGURE LAYOUT

PLOTTED: 29 Jun 2012, 3:08pm, cmassey

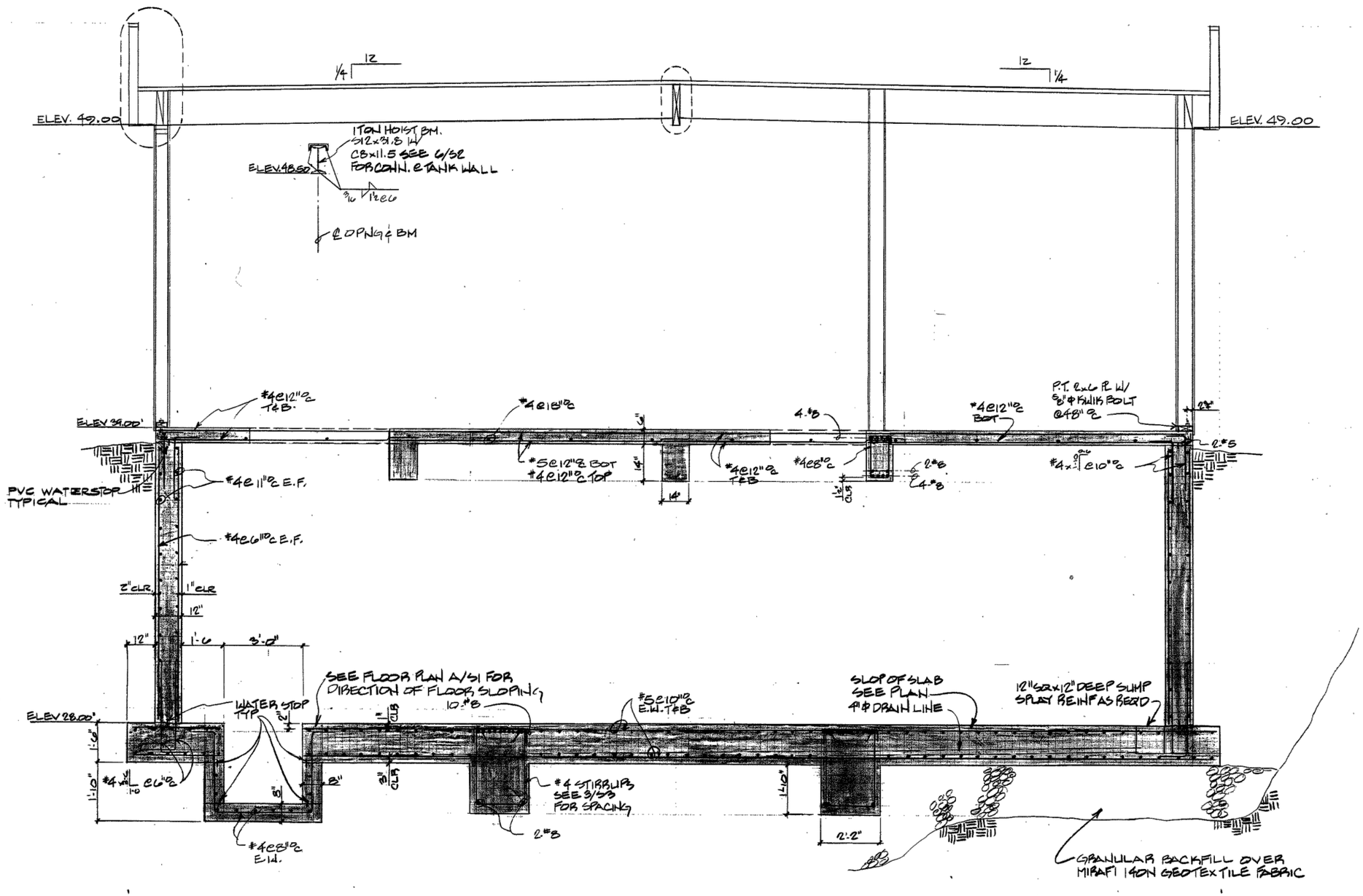

FIGURE 25
DIGESTER & CONTROL ROOM CROSS SECTION

NOT TO SCALE

NO.	REVISION	BY	DATE
-		---	---
-		---	---
-		---	---
-		---	---
-		---	---
-		---	---

KLEINFELDER
Bright People. Right Solutions.
3500 GATEWAY CENTRE BLVD, STE 200
MORRISVILLE, NC 27560
PH. 919-755-5011 FAX. 919-755-1414
www.kleinfelder.com

PROJ. NO. 127227

ACAD FILE: Fig 25 - Digester and Control Room Cross Section.dwg

FIGURE 25
DIGESTER & CONTROL ROOM CROSS SECTION

CITY OF TROUTDALE
TROUTDALE SEWER TREATMENT PLANT
DEMOLITION ACTION PLAN

TROUTDALE OREGON

DESIGNED BY: --
MODIFIED BY: --
CHECKED BY: --
DATE: 06-20-2012
SCALE: NOT TO SCALE

ORIGINAL SCALE IN INCHES FOR REDUCED PLANS
0 0.5 1.0 1.5 2.0

FIG. 25

1 of 1 sheets

PLOTTED: 29 Jun 2012, 3:09pm, cmassey

ATTACHED IMAGES:
ATTACHED XREFS: XRef: Troutdale STP Demo Action Plan\Miscellaneous\Figures\CAD LAYOUT: FIGURE LAYOUT
CAD FILE: W:\Civil\0312127227 - Troutdale STP Demo Action Plan\Miscellaneous\Figures\CAD TITLE BLOCK

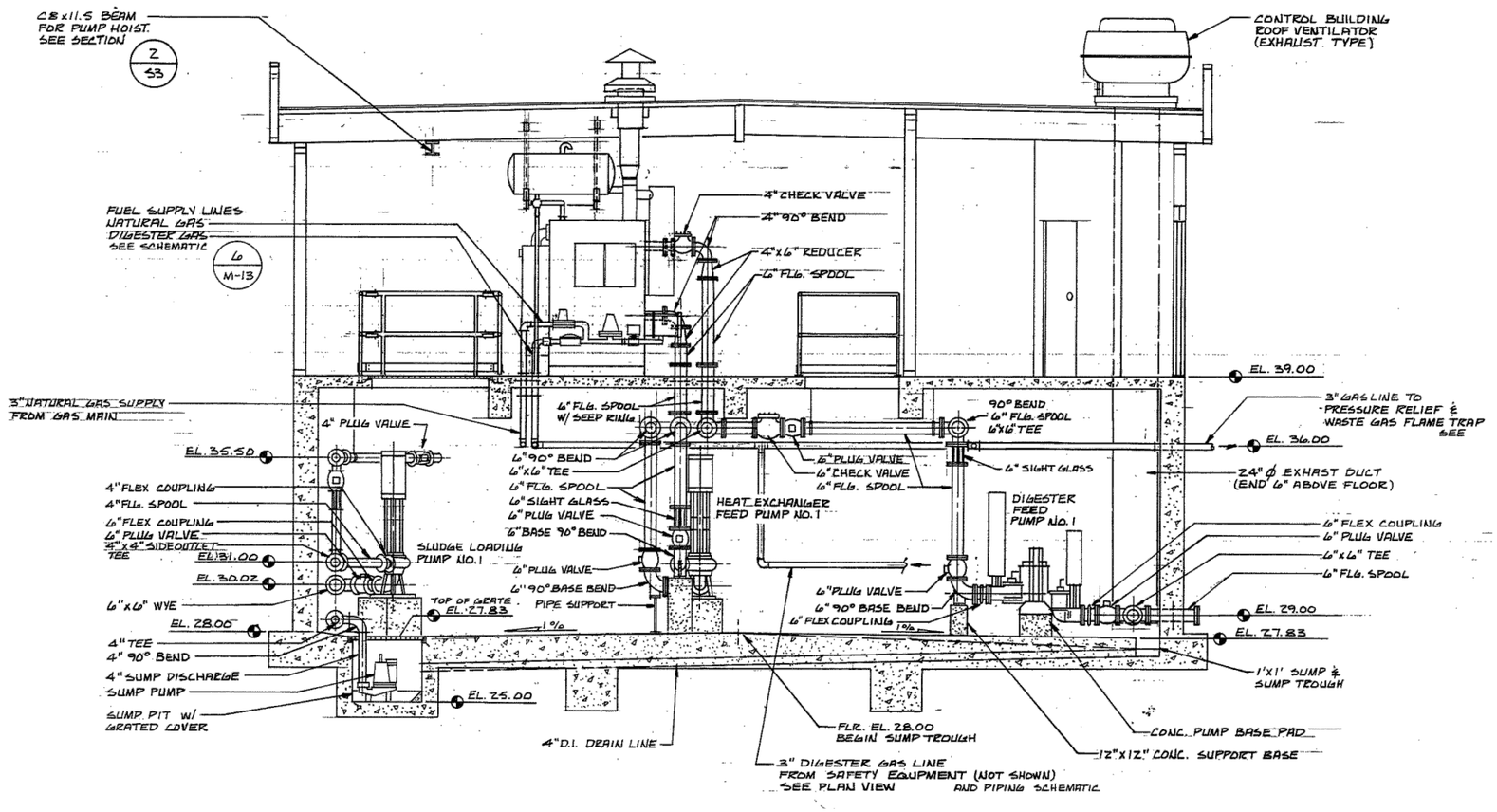

FIGURE 26
PUMP ROOM
CROSS SECTION

NOT TO SCALE

NO.	REVISION	BY	DATE
1	---	---	---
2	---	---	---
3	---	---	---
4	---	---	---
5	---	---	---
6	---	---	---

KLEINFELDER
Bright People. Right Solutions.
3500 GATEWAY CENTRE BLVD, STE 200
MORRISVILLE, NC 27560
PH. 919-755-5011 FAX. 919-755-1414
www.kleinfelder.com

PROJ. NO. 127227
ACAD FILE: Fig 26 - Pump Room Cross Section.dwg

FIGURE 26
PUMP ROOM
CROSS SECTION

CITY OF TROUTDALE
TROUTDALE SEWER TREATMENT PLANT
DEMOLITION ACTION PLAN

TROUTDALE OREGON

DESIGNED BY: --
MODIFIED BY: --
CHECKED BY: --
DATE: 06-20-2012
SCALE: NOT TO SCALE

ORIGINAL SCALE IN INCHES FOR REDUCED PLANS
0 0.5 1.0 1.5 2.0

FIG. 26

1 of 1 sheets

PLOTTED: 29 Jun 2012, 3:09pm, cmassey

ATTACHED IMAGES:
ATTACHED XREFS: XRef: Troutdale 11x17 TITLE BLOCK
CAD FILE: W:\Civil\2012\127227 - Troutdale STP Demo Action Plan\Miscellaneous\Figures\CAD LAYOUT: FIGURE LAYOUT

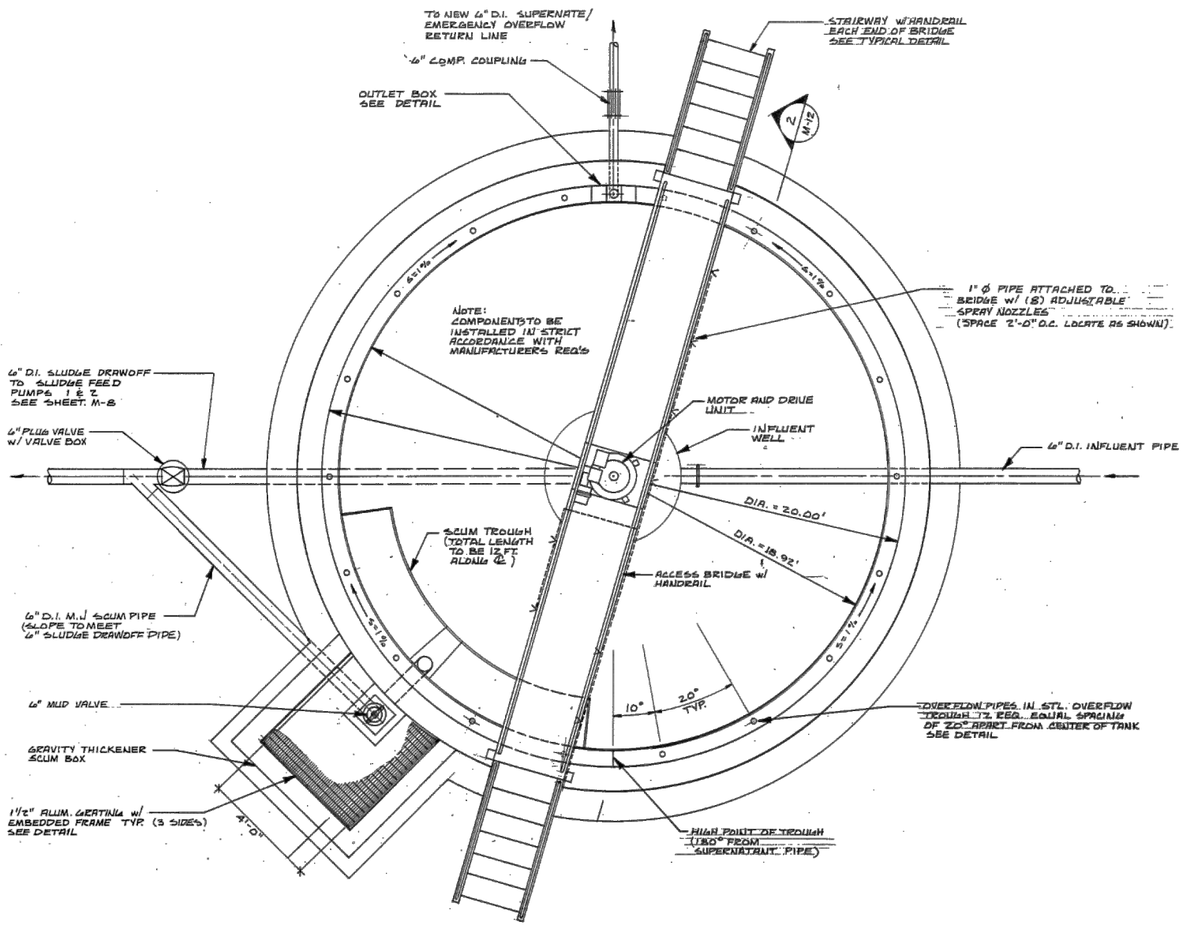

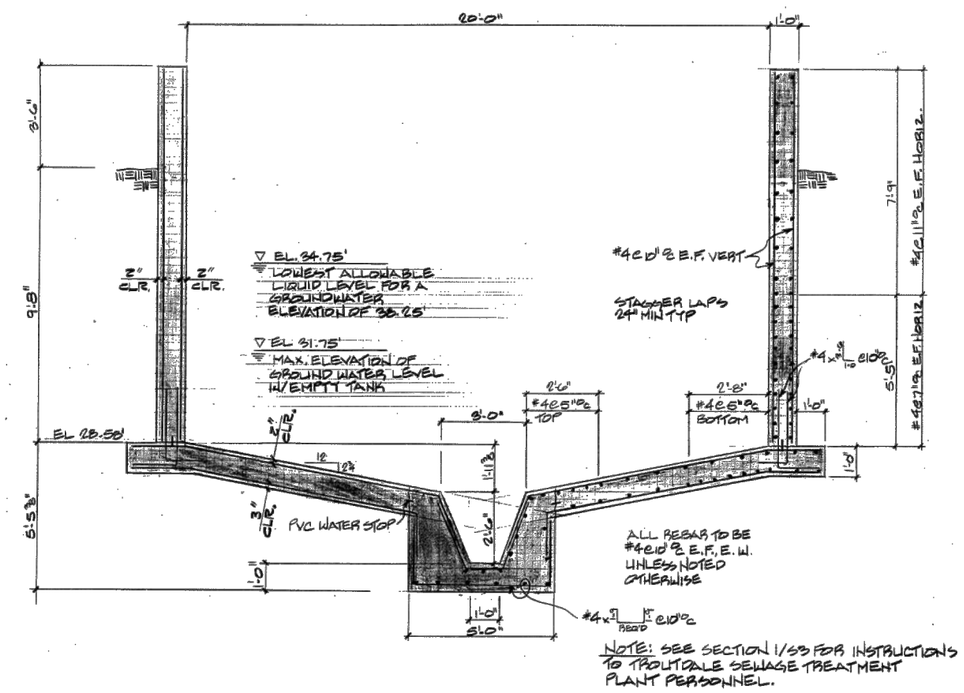

NOTE: SEE SECTION 1/S3 FOR INSTRUCTIONS TO TROUTDALE SEWAGE TREATMENT PLANT PERSONNEL.

FIGURE 27
GRAVITY THICKENER CROSS SECTION

NOT TO SCALE

NO.	REVISION	BY	DATE
1	-	---	---
2	-	---	---
3	-	---	---
4	-	---	---
5	-	---	---
6	-	---	---

KLEINFELDER
Bright People. Right Solutions.
3500 GATEWAY CENTRE BLVD, STE 200
MORRISVILLE, NC 27560
PH. 919-755-5011 FAX. 919-755-1414
www.kleinfelder.com

PROJ. NO. 127227
ACAD FILE: Fig 27 - Gravity Thickener Cross Section.dwg

FIGURE 27
GRAVITY THICKENER CROSS SECTION

CITY OF TROUTDALE
TROUTDALE SEWER TREATMENT PLANT
DEMOLITION ACTION PLAN

TROUTDALE OREGON

DESIGNED BY: --
MODIFIED BY: --
CHECKED BY: --
DATE: 06-20-2012
SCALE: NOT TO SCALE

ORIGINAL SCALE IN INCHES FOR REDUCED PLANS
0 0.5 1.0 1.5 2.0

FIG. 27

1 of 1 sheets

PLOTTED: 29 Jun 2012, 3:09pm, cmassey

ATTACHED IMAGES:
ATTACHED XREFS: XRef: Troutdale 11x17 TITLE BLOCK
CAD FILE: W:\Civil\20\127227 - Troutdale STP Demo Action Plan\Miscellaneous\Figures\CAD LAYOUT: FIGURE LAYOUT

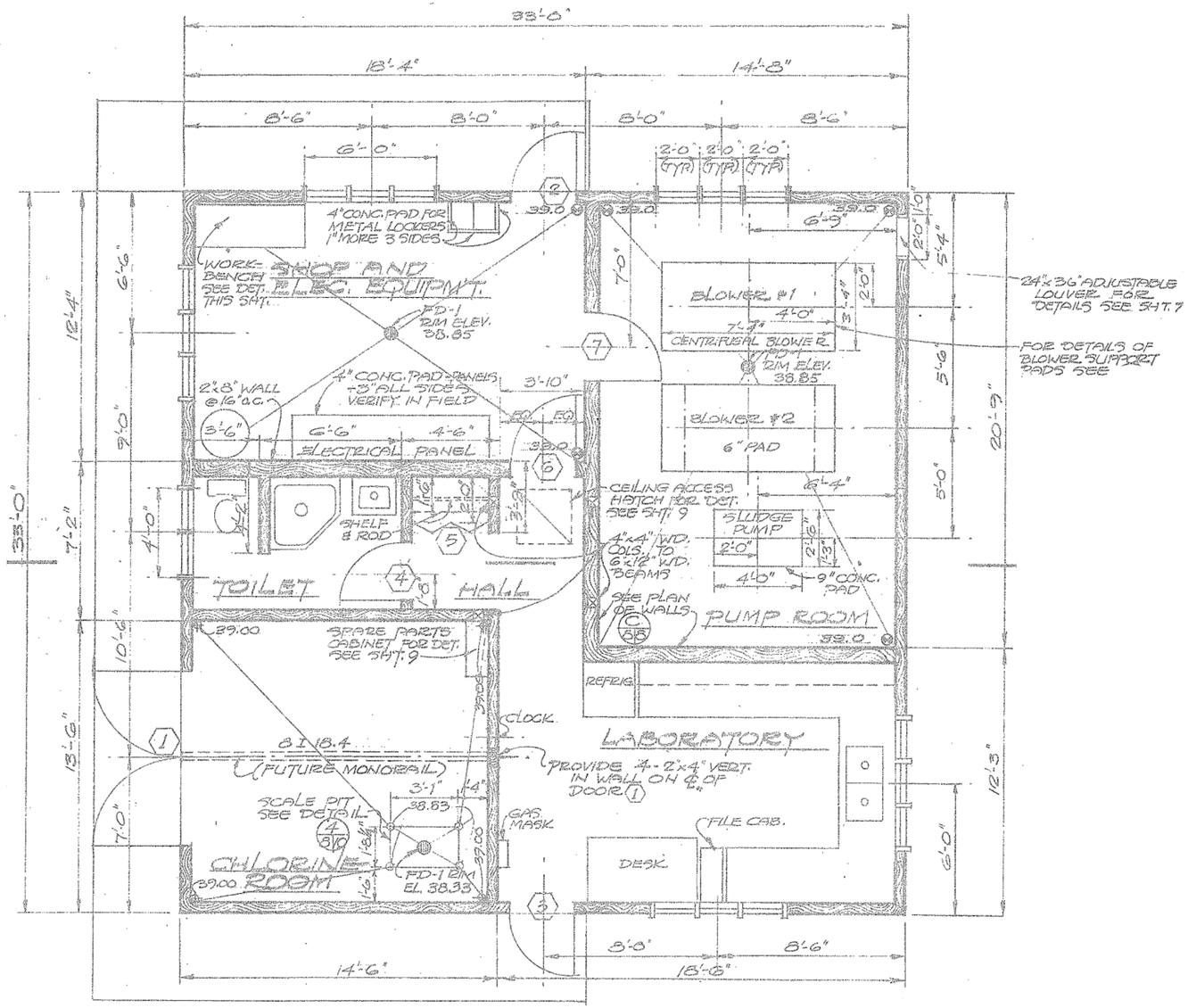

NO.	REVISION	BY	DATE
△	-	---	---
△	-	---	---
△	-	---	---
△	-	---	---
△	-	---	---
△	-	---	---

KLEINFELDER
Bright People. Right Solutions.
3500 GATEWAY CENTRE BLVD, STE 200
MORRISVILLE, NC 27560
PH. 919-755-5011 FAX. 919-755-1414
www.kleinfelder.com

PROJ. NO. 127227

ACAD FILE: Fig 28 - Control Building Floor Plan.dwg

FIGURE 28
CONTROL BUILDING
FLOOR PLAN

CITY OF TROUTDALE
TROUTDALE SEWER TREATMENT PLANT
DEMOLITION ACTION PLAN

TROUTDALE OREGON

FIGURE 28
CONTROL BUILDING FLOOR PLAN

NOT TO SCALE

DESIGNED BY: --
MODIFIED BY: --
CHECKED BY: --
DATE: 06-20-2012
SCALE: NOT TO SCALE

ORIGINAL SCALE IN INCHES FOR REDUCED PLANS
0 0.5 1.0 1.5 2.0

FIG. 28

1 of 1 sheets

ATTACHED IMAGES:
ATTACHED XREFS: XRef: Troutdale 11x17 TITLE BLOCK
CAD FILE: W:\Civil\2012\127227 - Troutdale STP Demo Action Plan\Miscellaneous\Figures\CAD LAYOUT: FIGURE LAYOUT

PLOTTED: 29 Jun 2012, 3:09pm, cmassey

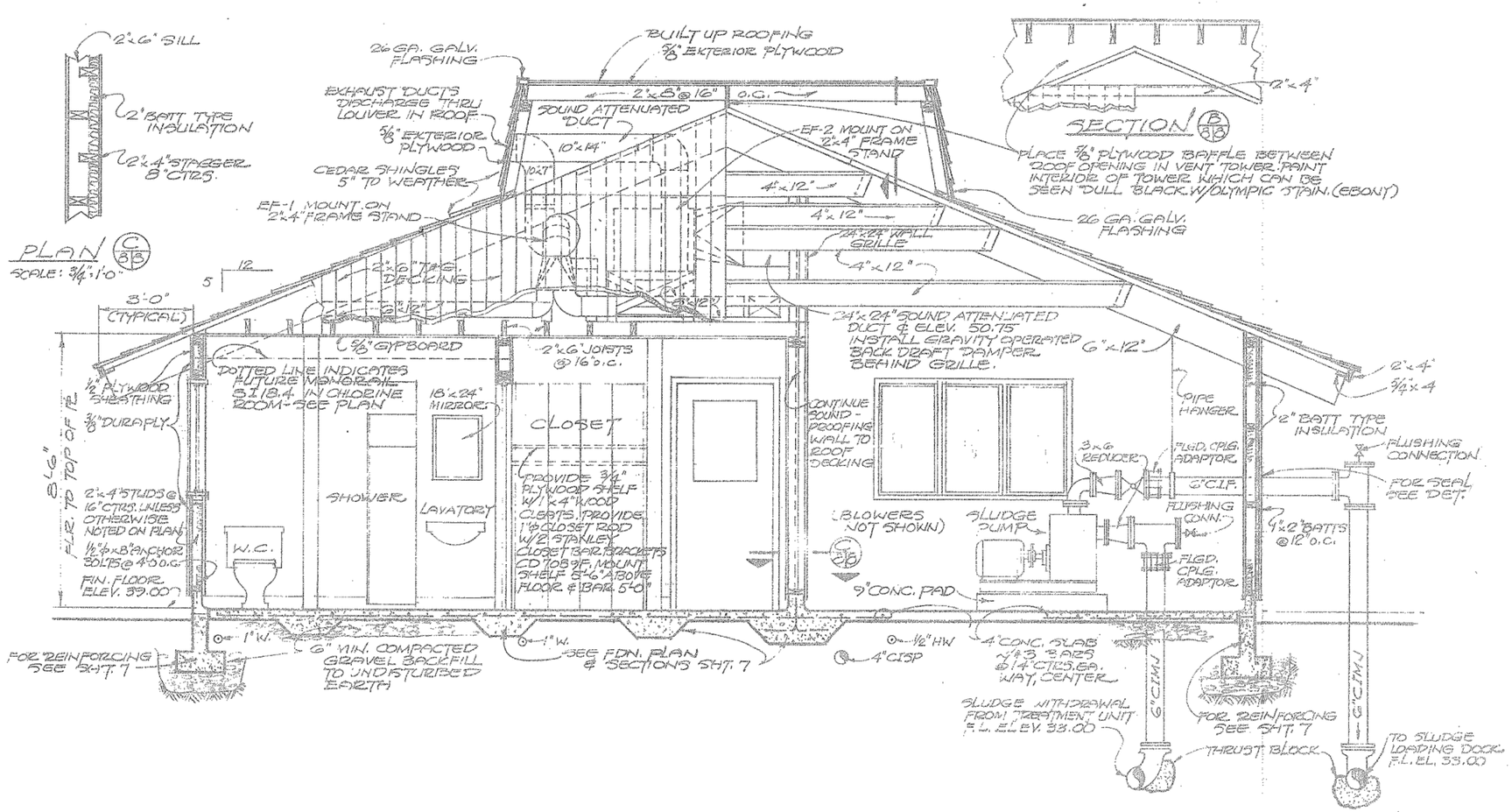

FIGURE 29
CONTROL BUILDING CROSS SECTION

NOT TO SCALE

NO.	REVISION	BY	DATE
1	---	---	---
2	---	---	---
3	---	---	---
4	---	---	---
5	---	---	---

KLEINFELDER
Bright People. Right Solutions.
3500 GATEWAY CENTRE BLVD, STE 200
MORRISVILLE, NC 27560
PH. 919-755-5011 FAX. 919-755-1414
www.kleinfelder.com

PROJ. NO. 127227

ACAD FILE: Fig 29 - Control Building Cross Section.dwg

FIGURE 29
CONTROL BUILDING CROSS SECTION

CITY OF TROUTDALE
TROUTDALE SEWER TREATMENT PLANT
DEMOLITION ACTION PLAN

TROUTDALE OREGON

DESIGNED BY: --
MODIFIED BY: --
CHECKED BY: --
DATE: 06-20-2012
SCALE: NOT TO SCALE

ORIGINAL SCALE IN INCHES FOR REDUCED PLANS
0 0.5 1.0 1.5 2.0

FIG. 29

1 of 1 sheets

ATTACHED IMAGES:
ATTACHED XREFS: XRef: Troutdale 11x17 TITLE BLOCK
CAD FILE: W:\Civil\2012\127227 - Troutdale STP Demo Action Plan\Miscellaneous\Figures\CAD\ LAYOUT: FIGURE LAYOUT

PLOTTED: 29 Jun 2012, 3:09pm, cmassey

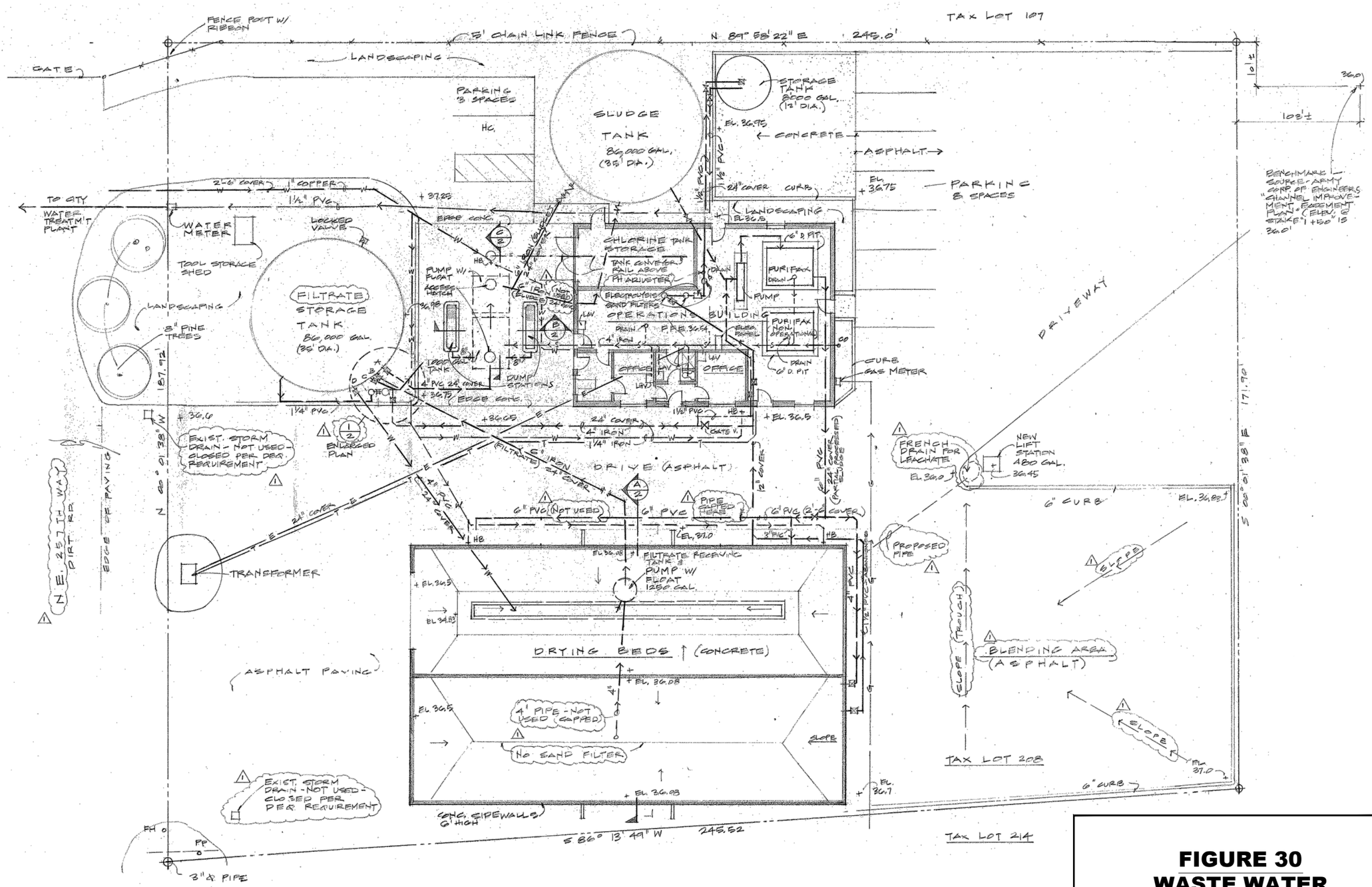

FIGURE 30
WASTE WATER MANAGEMENT SITE PLAN

NOT TO SCALE

NO.	REVISION	BY	DATE
1	---	---	---
2	---	---	---
3	---	---	---
4	---	---	---
5	---	---	---
6	---	---	---

KLEINFELDER
Bright People. Right Solutions.
3500 GATEWAY CENTRE BLVD, STE 200
MORRISVILLE, NC 27560
PH. 919-755-5011 FAX. 919-755-1414
www.kleinfelder.com

PROJ. NO. 127227

FIGURE 30
WASTE WATER MANAGEMENT SITE PLAN

CITY OF TROUTDALE
TROUTDALE SEWER TREATMENT PLANT
DEMOLITION ACTION PLAN

TROUTDALE OREGON

ACAD FILE: Fig 30 - Waste Water Site Plan.dwg

DESIGNED BY: --
MODIFIED BY: --
CHECKED BY: --
DATE: 06-20-2012
SCALE: NOT TO SCALE

ORIGINAL SCALE IN INCHES FOR REDUCED PLANS
0 0.5 1.0 1.5 2.0

FIG. 30

1 of 1 sheets

PLOTTED: 29 Jun 2012, 3:09pm, cmassey

ATTACHED IMAGES:
ATTACHED XREFS: XRef: Troutdale 11x17 TITLE BLOCK
CAD FILE: W:\Civil\20121227\27 - Troutdale STP Demo Action Plan\Miscellaneous\Figures\CAD LAYOUT: FIGURE LAYOUT

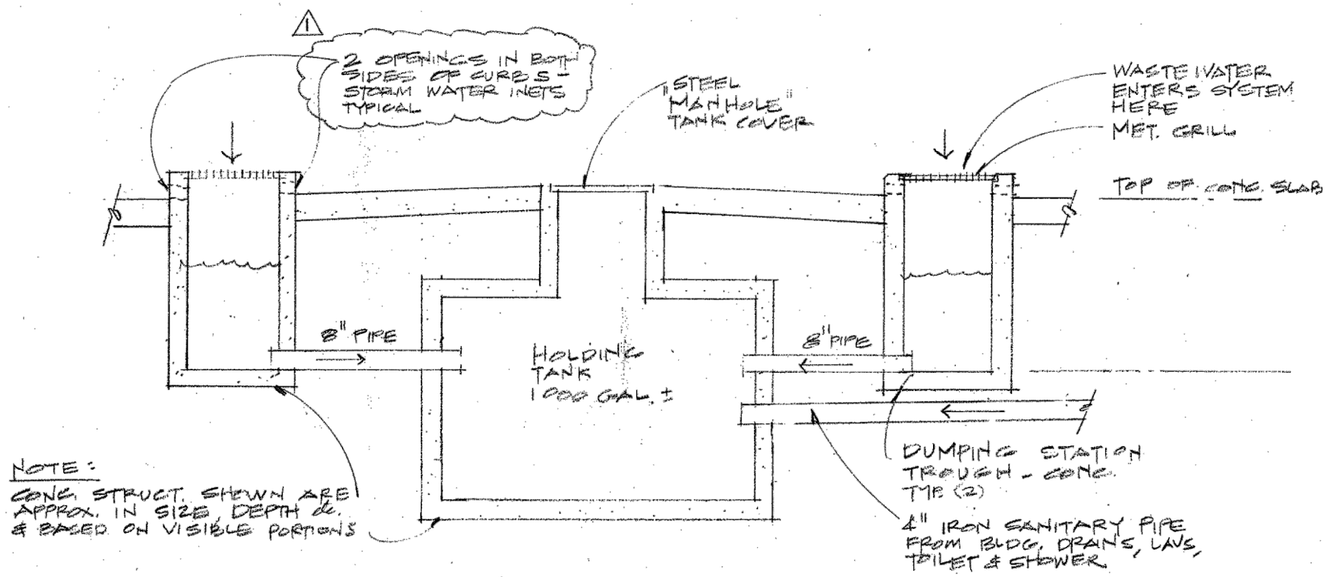

FIGURE 31
HOLDING TANK
CROSS SECTION

NOT TO SCALE

NO.	REVISION	BY	DATE
1	-	---	---
2	-	---	---
3	-	---	---
4	-	---	---
5	-	---	---
6	-	---	---

KLEINFELDER
Bright People. Right Solutions.
3500 GATEWAY CENTRE BLVD, STE 200
MORRISVILLE, NC 27560
PH. 919-755-5011 FAX. 919-755-1414
www.kleinfelder.com

PROJ. NO. 127227

ACAD FILE: Fig 31 - Holding Tank Cross Section.dwg

FIGURE 31
HOLDING TANK
CROSS SECTION

CITY OF TROUTDALE
TROUTDALE SEWER TREATMENT PLANT
DEMOLITION ACTION PLAN

TROUTDALE OREGON

DESIGNED BY: --
MODIFIED BY: --
CHECKED BY: --
DATE: 06-20-2012
SCALE: NOT TO SCALE

ORIGINAL SCALE IN INCHES FOR REDUCED PLANS
0 0.5 1.0 1.5 2.0

FIG. 31

1 of 1 sheets

PLOTTED: 29 Jun 2012, 3:10pm, cmassey

ATTACHED IMAGES:
ATTACHED XREFS: XRef: Troutdale 11x17 TITLE BLOCK
CAD FILE: W:\Civil\20\127227 - Troutdale STP Demo Action Plan\Miscellaneous\Figures\CAD\ LAYOUT: FIGURE LAYOUT

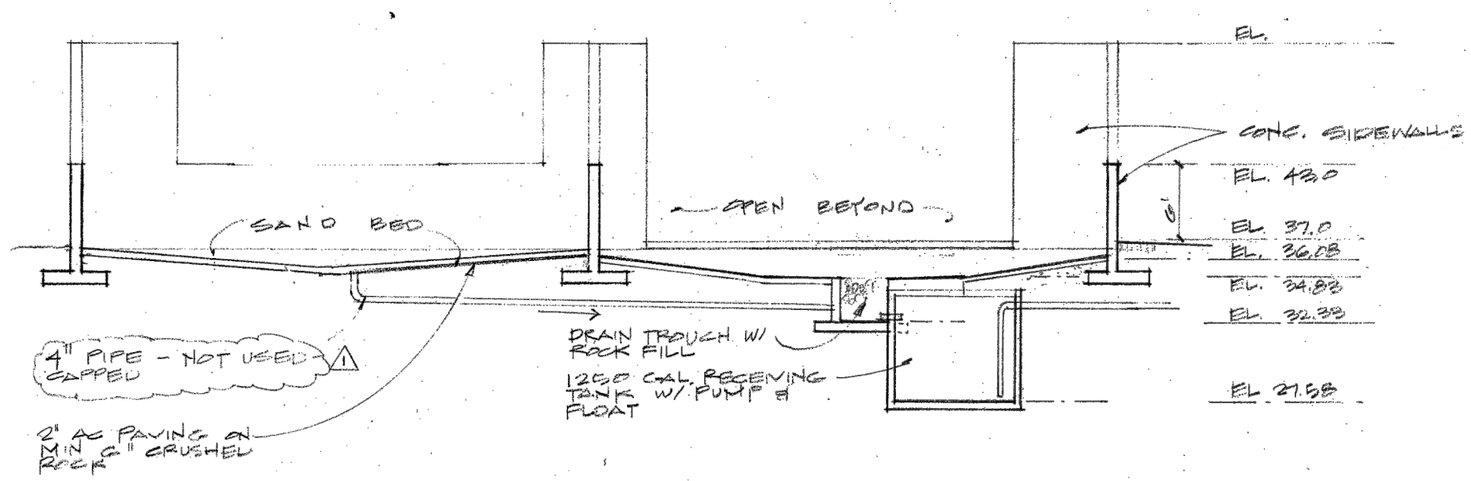

FIGURE 32
DRYING BEDS
CROSS SECTION

NOT TO SCALE

NO.	REVISION	BY	DATE
1	-	---	---
2	-	---	---
3	-	---	---
4	-	---	---
5	-	---	---

KLEINFELDER
Bright People. Right Solutions.
3500 GATEWAY CENTRE BLVD, STE 200
MORRISVILLE, NC 27560
PH. 919-755-5011 FAX. 919-755-1414
www.kleinfelder.com

PROJ. NO. 127227

ACAD FILE: Fig 32 - Drying Beds Cross Section.dwg

FIGURE 32
DRYING BEDS
CROSS SECTION

CITY OF TROUTDALE
TROUTDALE SEWER TREATMENT PLANT
DEMOLITION ACTION PLAN

TROUTDALE OREGON

DESIGNED BY: --
MODIFIED BY: --
CHECKED BY: --
DATE: 06-20-2012
SCALE: NOT TO SCALE

ORIGINAL SCALE IN INCHES FOR REDUCED PLANS
0 0.5 1.0 1.5 2.0

FIG. 32

1 of 1 sheets

ATTACHED IMAGES:
ATTACHED XREFS: XRef: Troutdale 11x17 TITLE BLOCK
CAD FILE: W:\Civil\20\127227 - Troutdale STP Demo Action Plan\Miscellaneous\Figures\CAD\ LAYOUT: FIGURE LAYOUT

PLOTTED: 29 Jun 2012, 3:10pm, cmassey

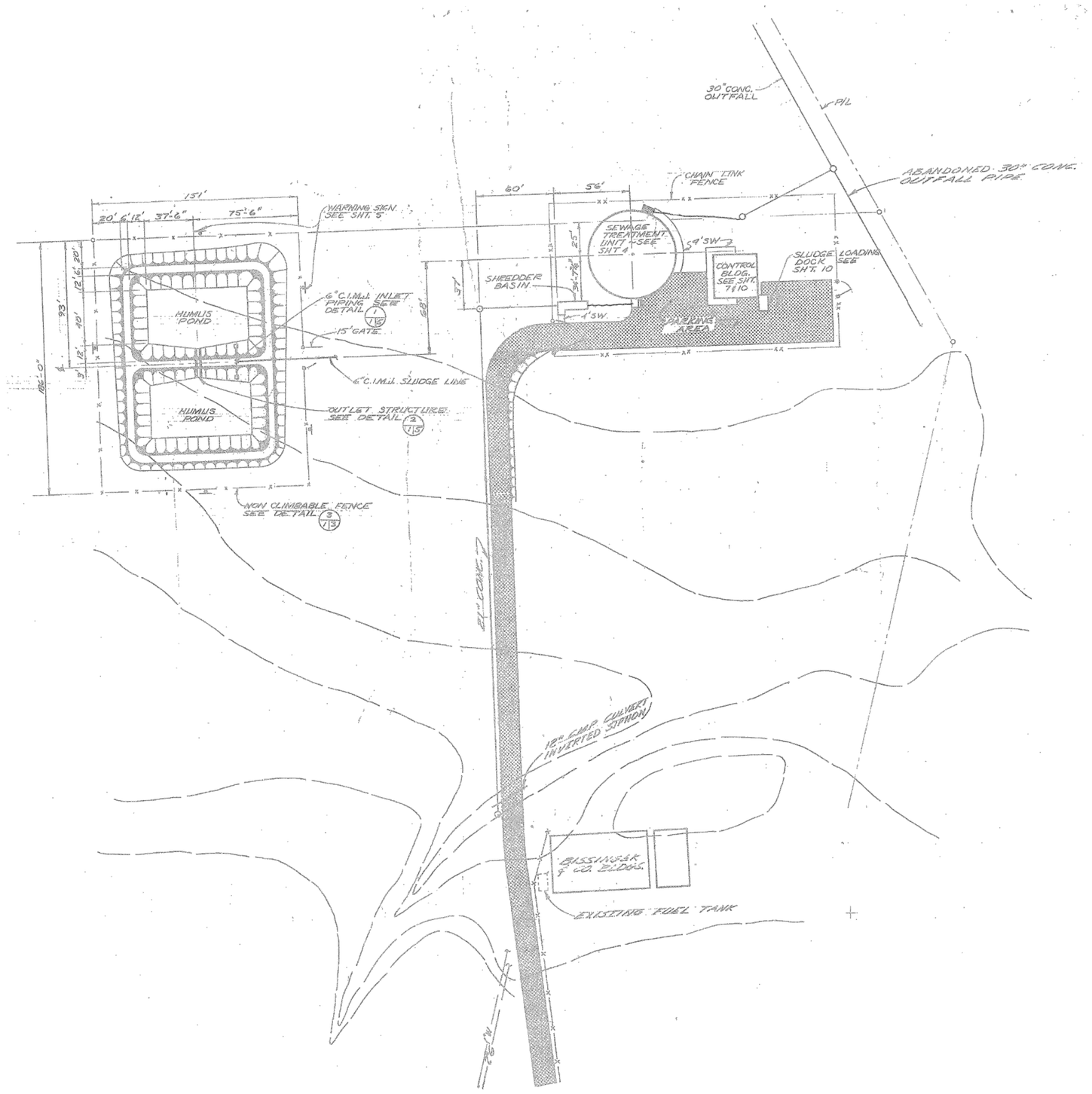

FIGURE 33
ORIGINAL HUMUS PONDS

NOT TO SCALE

NO.	REVISION	BY	DATE
1	-	---	---
2	-	---	---
3	-	---	---
4	-	---	---
5	-	---	---
6	-	---	---

KLEINFELDER
Bright People. Right Solutions.
3500 GATEWAY CENTRE BLVD, STE 200
MORRISVILLE, NC 27560
PH. 919-755-5011 FAX. 919-755-1414
www.kleinfelder.com

PROJ. NO. 127227
ACAD FILE: Fig 33 - Original Humus Ponds.dwg

FIGURE 33
ORIGINAL HUMUS PONDS

CITY OF TROUTDALE
TROUTDALE SEWER TREATMENT PLANT
DEMOLITION ACTION PLAN

TROUTDALE OREGON

DESIGNED BY: --
MODIFIED BY: --
CHECKED BY: --
DATE: 06-20-2012
SCALE: NOT TO SCALE

ORIGINAL SCALE IN INCHES FOR REDUCED PLANS
0 0.5 1.0 1.5 2.0

FIG. 33

1 of 1 sheets

ATTACHED IMAGES:
ATTACHED XREFS: XRef: Troutdale 11x17 TITLE BLOCK
CAD FILE: W:\Civil\2012\127227 - Troutdale STP Demo Action Plan\Miscellaneous\Figures\CAD\ LAYOUT: FIGURE LAYOUT

PLOTTED: 29 Jun 2012, 3:10pm, cmassey

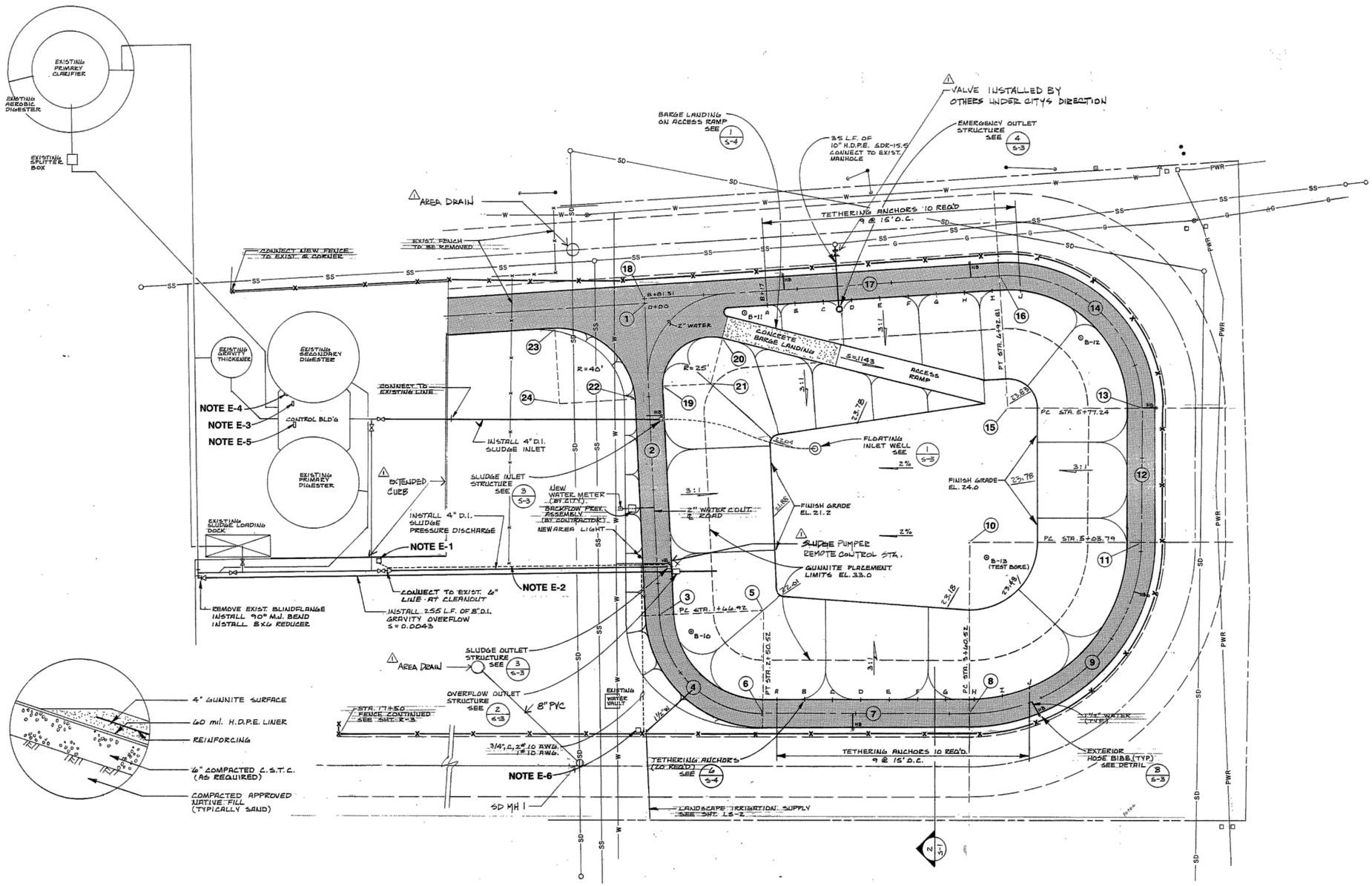

NO.	REVISION	BY	DATE
1	---	---	---
2	---	---	---
3	---	---	---
4	---	---	---
5	---	---	---
6	---	---	---

KLEINFELDER
Bright People. Right Solutions.
3500 GATEWAY CENTRE BLVD, STE 200
MORRISVILLE, NC 27560
PH. 919-755-5011 FAX. 919-755-1414
www.kleinfelder.com

PROJ. NO. 127227
ACAD FILE: Fig 34 - Sludge Lagoon Site Plan.dwg

FIGURE 34
SLUDGE LAGOON SITE PLAN

CITY OF TROUTDALE
TROUTDALE SEWER TREATMENT PLANT
DEMOLITION ACTION PLAN

TROUTDALE OREGON

FIGURE 34
SLUDGE LAGOON SITE PLAN

NOT TO SCALE

DESIGNED BY: --
MODIFIED BY: --
CHECKED BY: --
DATE: 06-20-2012
SCALE: NOT TO SCALE

ORIGINAL SCALE IN INCHES FOR REDUCED PLANS
0 0.5 1.0 1.5 2.0

FIG. 34

1 of 1 sheets

ATTACHED IMAGES:
ATTACHED XREFS: XRef: Troutdale 11x17 TITLE BLOCK
CAD FILE: W:\Civil\20\127227 - Troutdale STP Demo Action Plan\Miscellaneous\Figures\CAD\ LAYOUT: FIGURE LAYOUT

PLOTTED: 29 Jun 2012, 3:10pm, cmassey

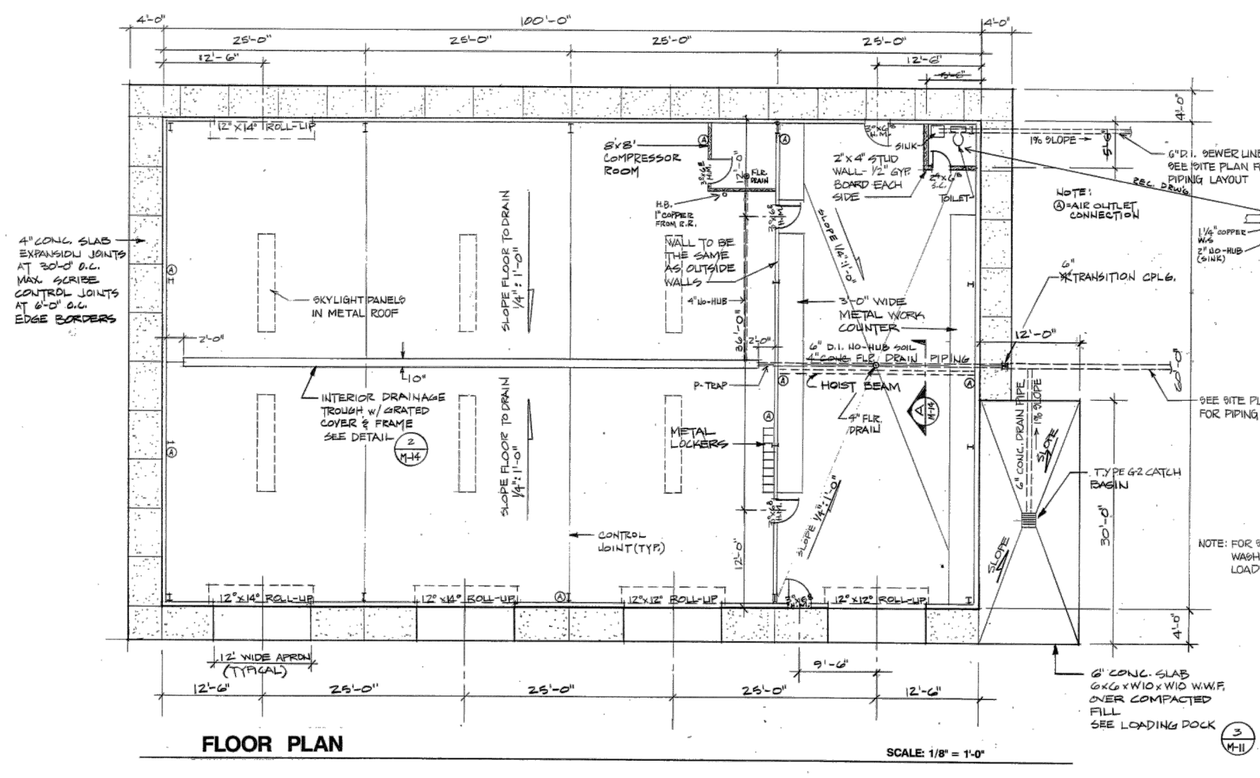

FLOOR PLAN

SCALE: 1/8" = 1'-0"

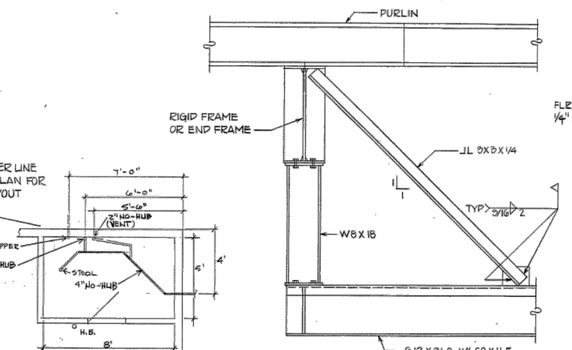

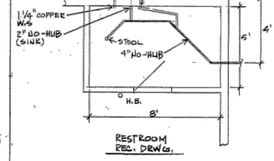

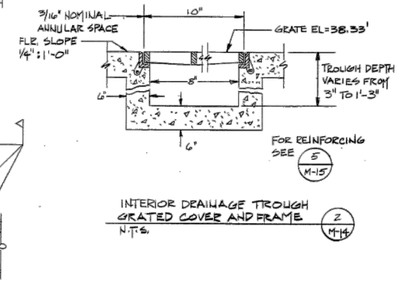

INTERIOR DRAINAGE TROUGH GRATED COVER AND FRAME 2 M-14
N.T.S.

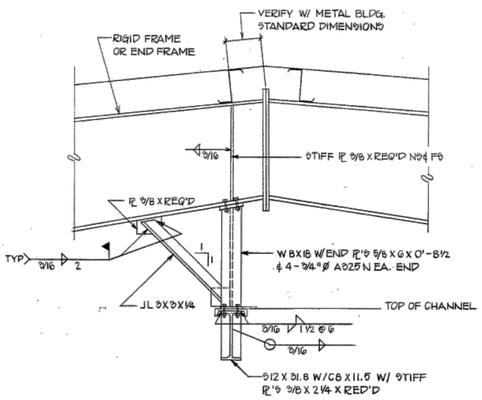

1 M-14 HOIST DETAILS

SCALE: 3/4"=1'-0"

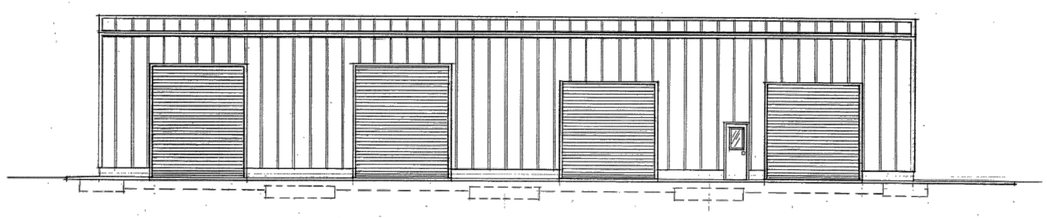

ELEVATION

SCALE: 1/8" = 1'-0"

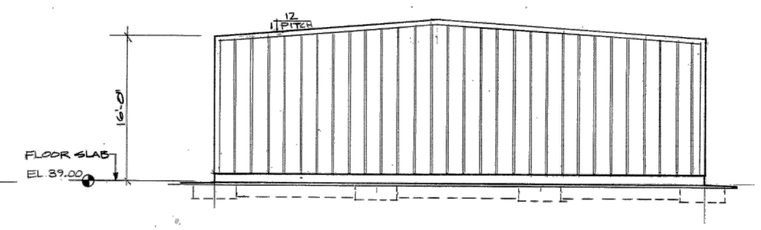

ELEVATION

SCALE: 1/8" = 1'-0"

NO.	REVISION	BY	DATE
1	---	---	---
2	---	---	---
3	---	---	---
4	---	---	---
5	---	---	---
6	---	---	---

KLEINFELDER
Bright People. Right Solutions.
3500 GATEWAY CENTRE BLVD, STE 200
MORRISVILLE, NC 27560
PH. 919-755-5011 FAX. 919-755-1414
www.kleinfelder.com

PROJ. NO. 127227
ACAD FILE: Fig 35 - Maint Bldg Plan & Elev.dwg

FIGURE 35
MAINTENANCE BUILDING
FLOOR PLAN & ELEV. VIEWS

CITY OF TROUTDALE
TROUTDALE SEWER TREATMENT PLANT
DEMOLITION ACTION PLAN

TROUTDALE OREGON

FIGURE 35 MAINTENANCE BUILDING FLOOR PLAN & ELEVATION VIEWS

NOT TO SCALE

DESIGNED BY:	--
MODIFIED BY:	--
CHECKED BY:	--
DATE:	06-20-2012
SCALE:	NOT TO SCALE

ORIGINAL SCALE IN INCHES FOR REDUCED PLANS
0 0.5 1.0 1.5 2.0

FIG. 35

1 of 1 sheets

ATTACHED IMAGES:
ATTACHED XREFS: XRef: Troutdale 11x17 TITLE BLOCK
CAD FILE: W:\Civil\20\127227 - Troutdale STP Demo Action Plan\Miscellaneous\Figures\CAD\ LAYOUT: FIGURE LAYOUT

PLOTTED: 03 Aug 2012, 8:15am, JFrazier

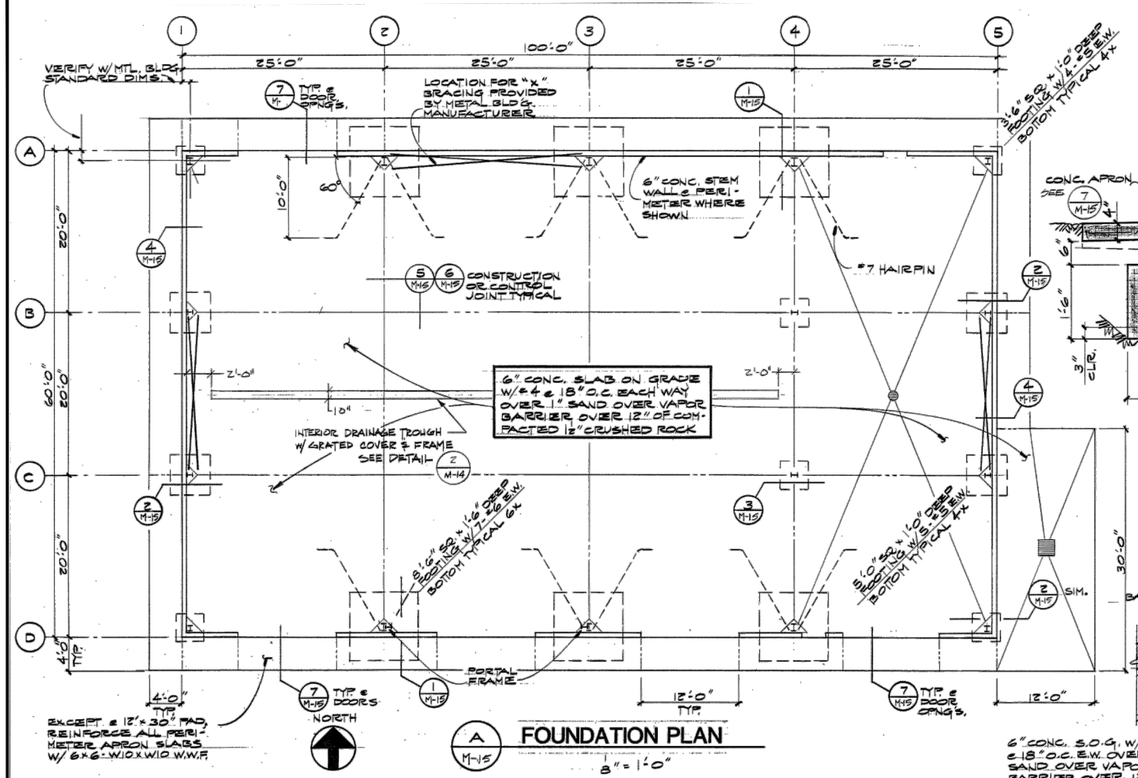

A — FOUNDATION PLAN

M-15 — 3/8" = 1'-0"

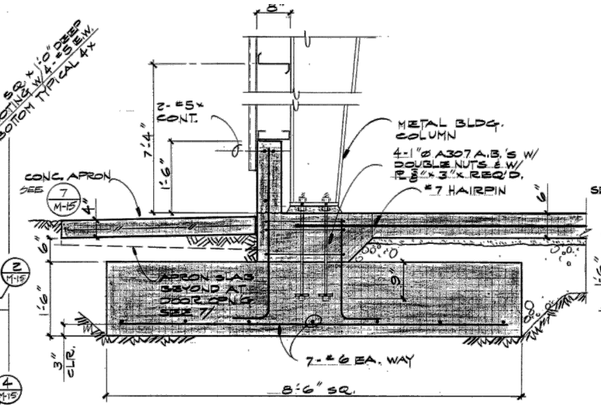

1 — SECTION

M-15 — 3/4" = 1'-0"

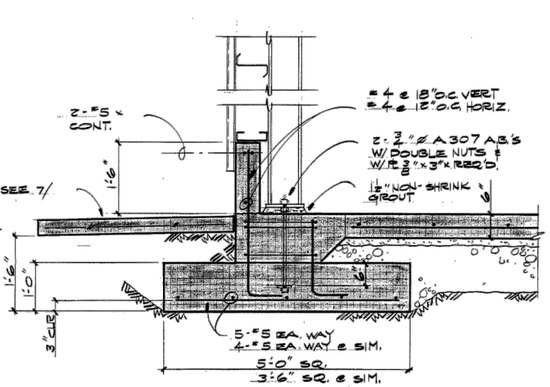

2 — SECTION

M-15 — 3/4" = 1'-0"

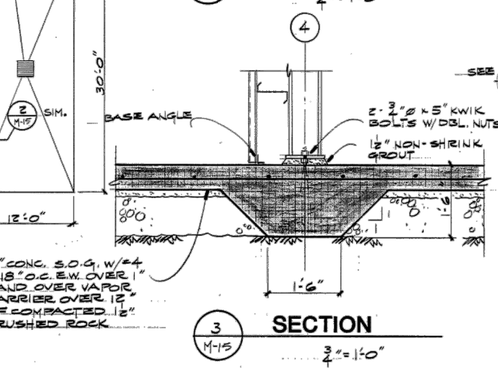

3 — SECTION

M-15 — 3/4" = 1'-0"

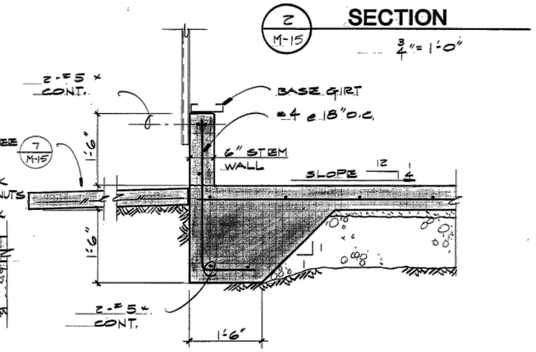

4 — SECTION

M-15 — 3/4" = 1'-0"

ASSUMED REACTIONS

LOCATION	VERTICAL			HORIZONTAL			BRACING	
	DL	LL	UP_W	DL	LL	WIND	V OR U	H
2A 3A 2D 3D	3.8	23.2	15.0	1.5	16.1	8.8	5.5	8.5
4A 4D	3.8	23.2	15.0	1.5	16.1	8.8	—	—
4B 4C	0	0	0	0	0	0.9	0	0
1A 1D 5A 5D	0.7	3.9	2.3	0	0	2.1	—	—
1B 1C 5B 5C	1.3	7.9	4.6	0	0	4.9	3.1	3.5

* NOTE: CONTRACTOR TO VERIFY REACTIONS W/ METAL BUILDING MANUFACTURER PRIOR TO CONSTRUCTION OF FOUNDATION.

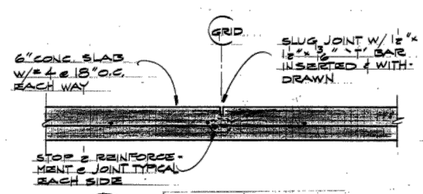

6 — CONTROL JOINT

M-15 — 1" = 1'-0"

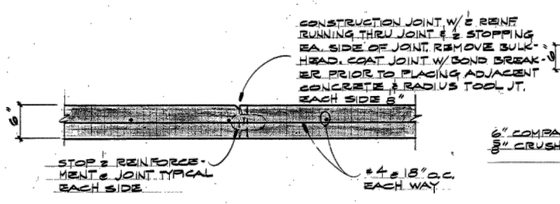

5 — CONSTRUCTION JOINT

M-15 — 1" = 1'-0"

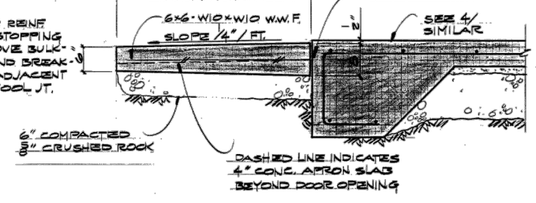

7 — SECTION

M-15 — 3/4" = 1'-0"

FIGURE 36 MAINTENANCE BUILDING FOUNDATION PLAN & SECTIONS

NOT TO SCALE

NO.	REVISION	BY	DATE
-		---	---
-		---	---
-		---	---
-		---	---
-		---	---
-		---	---

KLEINFELDER
Bright People. Right Solutions.
3500 GATEWAY CENTRE BLVD, STE 200
MORRISVILLE, NC 27560
PH. 919-755-5011 FAX. 919-755-1414
www.kleinfelder.com

PROJ. NO. 127227
ACAD FILE: Fig 36 - Maint Bldg Found Plan.dwg

FIGURE 36
MAINTENANCE BUILDING
FOUNDATION PLAN & SECTIONS

CITY OF TROUTDALE
TROUTDALE SEWER TREATMENT PLANT
DEMOLITION ACTION PLAN

TROUTDALE OREGON

DESIGNED BY: --
MODIFIED BY: --
CHECKED BY: --
DATE: 06-20-2012
SCALE: NOT TO SCALE

ORIGINAL SCALE IN INCHES FOR REDUCED PLANS
0 0.5 1.0 1.5 2.0

FIG. 36

1 of 1 sheets

ATTACHED IMAGES:
ATTACHED XREFS: XRef: Troutdale 11x17 TITLE BLOCK
CAD FILE: W:\Civil\2012\127227 - Troutdale STP Demo Action Plan\Miscellaneous\Figures\CAD LAYOUT: FIGURE LAYOUT

PLOTTED: 03 Aug 2012, 8:19am, JFrazier